ADVANCING VENTILATION®

CENTRIFUGAL ROOF AND SIDEWALL

Direct Drive and Belt Drive Centrifugal Roof and Sidewall Fans

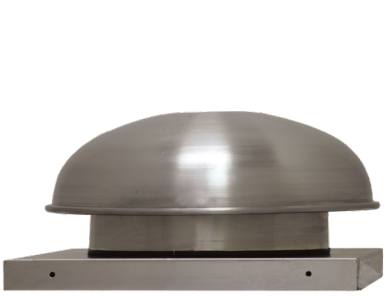

MODELS

LPD • CWD • SDB • STXB

Advancing Ventilation®

MODEL LPD

LOW PROFILE DIRECT DRIVE CENTRIFUGAL ROOF/SIDEWALL EXHAUSTER

MODEL FEATURES

- Exhaust air up to 420 CFM in high static pressure applications up to 1-3/4″ w.g.
- Low profile attractive spun aluminum exterior
- Direct drive units have low sound levels and quiet operation
- Non-overloading backward inclined wheel for efficiency at higher static pressures
- Roof or sidewall mounting options
- AMCA Air and Sound Licensed
- cULus 705 Listed

MODEL OVERVIEW

Model LPD direct drive fans are designed to exhaust air in low CFM, up to 420, high static pressure applications to 1-3/4″. When aesthetics are a concern the low profile design of the LPD is the perfect choice. The LPD is generally used for bathroom, office, or light commercial ventilation in ducted systems; and can be mounted either on the roof or wall as the application requires.

CONSTRUCTION FEATURES AND OPTIONS

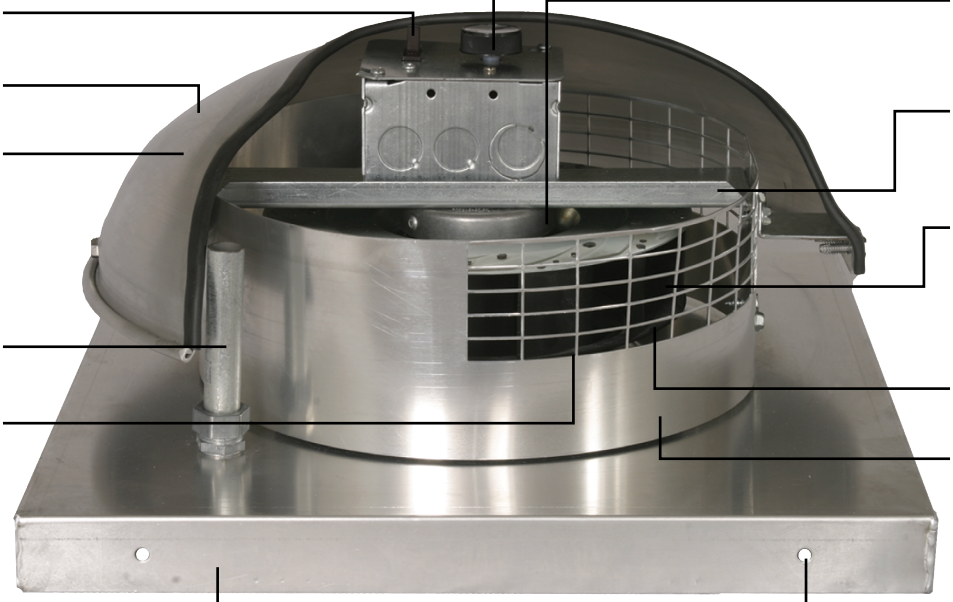

All specifications are subject to change without notice unless approved in submittal by Soler & Palau.

CONSTRUCTION SPECIFICATION

Housing

- Ultra low profile, aluminum construction
- Curb cap has integral deep spun inlet for efficient performance and prepunched mounting holes for ease of installation.
- Spun aluminum hood and skirt for weather protection and attractive appearance.
- Up to 140°F airstream temperature.
- Heavy-gauge motor support for rigidity and strength.
- Quick access to motor compartment for ease of maintenance.
- Conduit passage for easy electrical connection from below roof.
- Birdscreen included on standard all models

Wheel

- Backward inclined for efficiency at higher static pressure.
- Non-overloading for safe operation in ducted systems.
- Tapered blades for efficiency and quiet operation.
- Wheels constructed of noncorrosive aluminum.
- Statically and dynamically balanced for smooth operation.

Speed Controllable Motors

- Unique external rotor design.
- Permanently lubricated bearings.
- Internal thermal protection.
- Standard motors are single speed, speed controllable, totally enclosed.
- All motors are rated for continuous duty.
- Disconnect is standard.
- 115V, 230V and 60/50 motor options.

Certifications

- AMCA Air and Sound Licensed.
- cULus 705 Listed Power Roof Ventilator label assures electrical reliability.
- UL label must be specified when needed.

OPTIONS/ACCESSORIES

Solid State Speed Control: S&P's solid state control is matched to allow smooth RPM variation and adjustment of airflow for system balancing. CFM is reduced in direct proportion to motor speed reduction. Speed controllers available for 115/1 or 230/1 operation. Exhauster performance can be controlled from the ventilated area.

Roof Curb: Prefabricated heavy-gauge galvanized steel, welded construction, 12" high (other heights are also available) with 1-1/2" wood nailer. Assures perfect fit of exhauster to roof opening. Options include burglar bars, single or double pitch construction and hinged curbs for easy duct access.

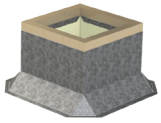

Motor Operated Damper: Motor operated aluminum damper for positive closure against backdraft.

Automatic Damper: Automatic aluminum damper for ease in installation and effective backdraft protection.

Curb Hinge Arrangement: The curb hinge arrangement provides easy access to the exhaust fan, backdraft damper, and duct for servicing and cleaning.

Special Coatings: Powered roof exhausters often require special coatings for protective and decorative purposes. Available coatings include: Synthetic Resin, Epoxy, and Heresite (air-dried phenolic). Contact your representative or the factory for more information on available coatings and colors.

DIMENSIONS

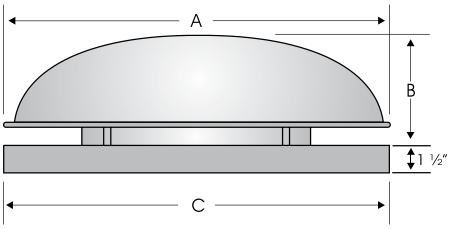

Size	O.D. Damper	Roof Opening	Curb O.D.	A	B	C	Average Ship Wt. Lbs.
6	11	11-3/4	14-3/4	16-1/2	7	16-1/2	12
8	11	11-3/4	14-3/4	16-1/2	7	16-1/2	15

PERFORMANCE

60 Hz

Model LPD	CFM @ Static Pressure											RPM (Nom.)	Max Motor Watts & Amps	Sones @ 1/2"
	0	1/8	1/4	3/8	1/2	5/8	3/4	1	1-1/4	1-1/2	1-3/4			
LPD06A60 115/1/60	302	268	247	222	197	175	155	118	87	52	-	2800	90 / 0.8	7.2
LPD08A60 115/1/60	387	358	331	303	275	245	222	178	138	98	63	2775	115 / 1.0	11.9
LPD06C60 230/1/60	293	263	245	225	204	184	167	128	82	57	-	2900	90 / 0.4	9.1
LPD08C60 230/1/60	423	381	350	316	292	265	238	188	140	97	52	2950	115 / 0.5	14.1

50 Hz

Model LPD	CFM @ Static Pressure											RPM (Nom.)	Max Motor Watts & Amps	Sones @ 1/2"
	0	1/8	1/4	3/8	1/2	5/8	3/4	1	1-1/4	1-1/2	1-3/4			
LPD06C50 230/1/50	279	252	232	213	196	172	156	115	67	-	-	2700	65 / 0.3	9.1
LPD08C50 230/1/50	390	345	317	292	263	237	213	161	105	43	-	2725	85 / 0.43	14.1

Performance certified is for installation type A-free inlet, free outlet.
Performance ratings include the effects of birdscreen in the airstream.
The sound ratings shown are loudness values in fan sones @ 5' (1.5m) in a hemispherical free field calculated per AMCA Standard 301. Values shown are for: Installation Type A: free inlet hemispherical sone levels.
Speed (RPM) shown is nominal. Performance is based on actual speed of test.

S&P USA Ventilation Systems, LLC., Div. of Soler & Palau Ventilation Group, certifies that the Models LPD shown herein are licensed to bear the AMCA Seal. The ratings shown are based on test and procedures performed in accordance with AMCA Publication 211 and AMCA Publication 311 and comply with the requirement of the AMCA Certified Ratings Program.

STANDARD 705

S&P patented motorized impellers typically exceed manufacturer's RPM ratings as shown in the AMCA certified performance table above. Motor manufacturer's published ratings are:

LPD06A60: 115/1/60/TE, 2600 RPM
LPD06C60: 230/1/60/TE, 2600 RPM
LPD06C50: 230/1/50/TE, 2500 RPM
LPD08A60: 115/1/60/TE, 3050 RPM
LPD08C60: 230/1/60/TE, 3050 RPM
LPD08C50: 230/1/50/TE, 2700 RPM

Industry best 5 year fan housing warranty, 3 year motor warranty

MODEL SDB & SDBe

BELT DRIVE CENTRIFUGAL DOWNBLAST ROOF EXHAUSTERS

MODEL FEATURES

- Exhaust air up to 31,563 CFM in high static pressure applications up to 2 w.g.
- Attractive spun aluminum exterior
- Belt drives permit easy performance adjustments when needed
- Curved non-overloading backward inclined wheel for efficiency at higher static pressures
- AMCA Air and Sound Licensed
- cULus 705 Listed
- Miami-Dade NOA, Florida Product Approval, and Texas Department of Insurance Listing option available
- EC motor options available for integrated speed control

MODEL OVERVIEW

Model SDB belt drive fans are designed to exhaust air up to 31,563 CFM in high static pressure applications to 2". The aluminum exterior provides an attractive appearance. Belt drive results in lower operating RPM and sound levels, making the Model SDB well suited to applications where quiet operation is important. Belt drive also permits easy performance adjustments when needed to balance the total ventilation system. The non-overloading backward inclined wheel with its higher static pressure capability makes this unit suitable for either ducted or non-ducted applications. It's roof mounting permits location near the area to be ventilated, allowing short duct runs and more efficient operation.

SDBs are primarily used for the exhaust of relatively clean air from a wide range of commercial, industrial and institutional environments such as manufacturing and assembly plants, office buildings, schools, hospitals, restaurants, athletic facilities and many others.

Applications	
General Purpose Exhaust - Clean Air	
• Bathrooms	• Manufacturing and Assembly plants
• Garages	• Warehouse
• General (non-grease) Kitchen Areas	• Places of Worship
• Offices	• Schools
• Dormitories	• Many More

DIMENSIONS

Dimensions in Inches

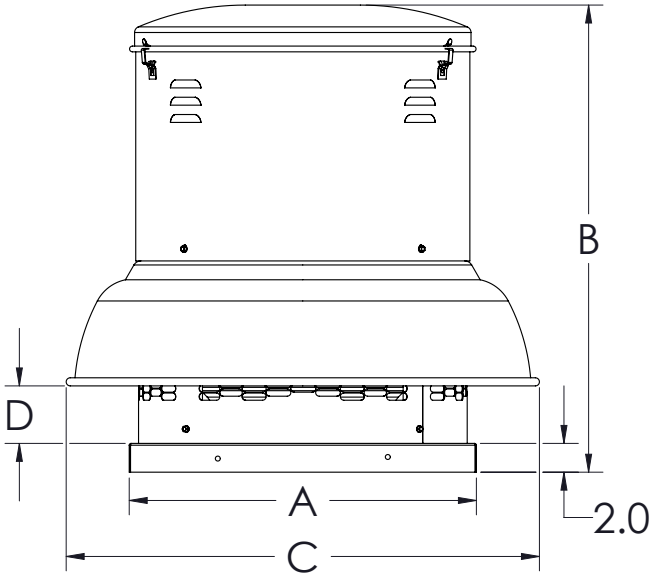

Size	A	B	C	D	Roof Opening	Curb O.D.	Damper (O.D.)	Approximate Ship Wt. Lbs.
6	18	30 1/8	25	3 3/8	13 1/2	16 1/2	12	111
7	18	30 1/8	25	3 3/8	13 1/2	16 1/2	12	111
8	18	30 1/8	25	3 3/8	13 1/2	16 1/2	12	114
10	18	30 1/8	25	3 3/8	13 1/2	16 1/2	12	115
12	20	31 11/16	27 5/8	3 7/8	15 1/2	18 1/2	14	128
14	20	31 11/16	27 5/8	3 7/8	15 1/2	18 1/2	14	135
15	24	32 1/2	32 7/8	4	19 1/2	22 1/2	18	151
16	24	32 1/2	32 7/8	4	19 1/2	22 1/2	18	151
18	30	36 3/8	39 3/16	4 5/8	25 1/5	28 1/2	24	217
20	30	38 5/16	45	6 1/8	25 1/5	28 1/2	24	233
22	30	38 5/16	45	6 1/8	25 1/5	28 1/2	24	233
24	36	46 5/8	49 3/8	6	31 1/2	34 1/2	30	349
27	36	49 1/16	49 3/8	8 1/2	31 1/2	34 1/2	30	357
30	42	50 1/4	56	7 3/8	37 1/2	40 1/2	36	465
33	42	50 1/4	56	7 3/8	37 1/2	40 1/2	36	467
36	42 5/16	48 7/8	64 1/4	7	37 1/2	40 1/2	36	541
42	54 1/4	54 7/8	71 3/16	11 1/2	49 1/2	52 1/2	48	744
48	54 1/4	58 1/8	78 3/16	12 7/8	49 1/2	52 1/2	48	789

*Approximate unit weight includes the largest cataloged open drip proof motor, drives (if applicable), less crating.

SDB MODEL OVERVIEW & CONSTRUCTION FEATURES

Size Range	6, 7, 8, 10, 12, 14, 15, 16, 18, 20, 22, 24, 27, 30, 33, 36, 42, & 48
Motor HP Range	1/4 to 7 1/2
CFM Range	41 to 31,563
Static Pressure	up to 2 in. w.g.
Warranty	5 years

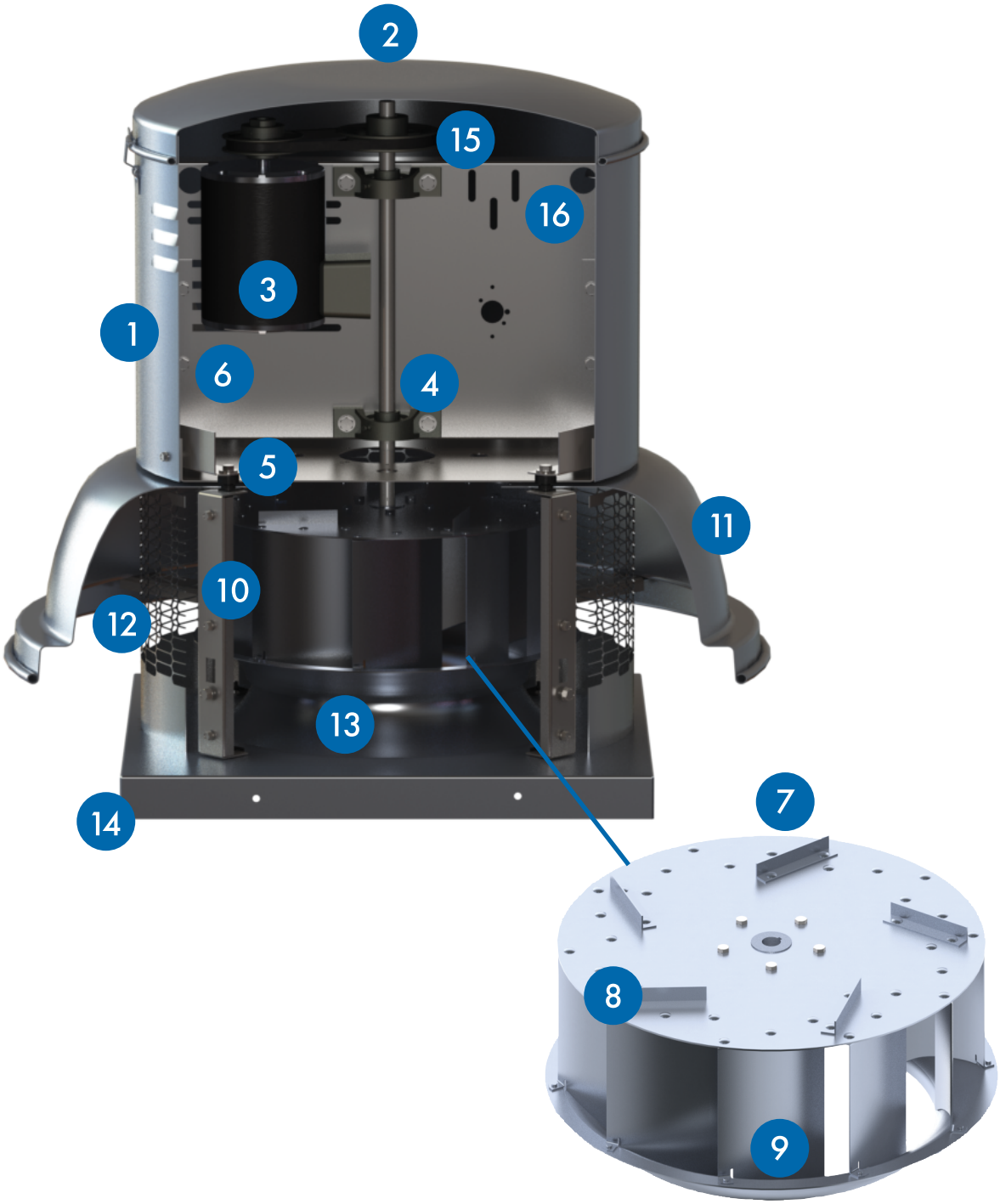

#	Feature	Description
1	Motor Cover	Heavy-gauge aluminum motor cover provides weather protection for motor compartment.
2	Motor Cover Cap	Heavy-gauge aluminum top with rolled bead for added strength.
3	Motor	Open drip-proof enclosure standard, many other options available.
4	Bearings	Air handling ball bearing type with cast iron housing and grease fittings.
5	Vibration Isolators	Neoprene (rubber) vibration isolators to reduce vibration and noise.
6	Motor Mounting Plate	Heavy-gauge galvanized motor mounting plate.
7	Wheel	Aluminum, non-overloading, backward-inclined curved centrifugal wheel for maximum efficiency. Each wheel is dynamically balanced for smooth operation and long life.
8	Cooling Vanes	Helps promote cooling of the motor and drive by pulling air through the motor compartment. Helps maximize the life of the motor and drives.
9	Curved Blades	Designed to provide more CFM per HP and lower sound levels.
10	Support Legs	4 heavy-gauge galvanized support legs to anchor the motor plate to the fan base for stability and vibration reduction.
11	Fan Skirt	Aluminum fan skirt with rolled bead for extra strength. Fan skirt directs the exhausted air downward.
12	Birdscreen	Aluminum birdscreen standard to protect the fan from birds and other large objects.
13	Inlet Venturi	Deep spun single piece inlet venturi for optimum air and sound performance
14	Curb Cap	Fully welded curb cap for rigidity and weather protection. Pre-punched mounting holes for ease of installation.
15	Drives	Sized for 150% of drive HP, adjustable pitch motor sheaves.
16	Lifting Lugs	Standard on all belt drive models, SDB, for easy and safe placement of the fan on roof.
17	Disconnect Switch (not shown)	Standard with ODP and TE single speed motors. Ships loose.

OPTIONS/ACCESSORIES

Automatic Belt Tensioner (SDB): Available on sizes 6-16, The Automatic Belt Tensioners eliminate the need for regular manual retensioning of drives, and the risk of inadvertently over-tensioning drive components is avoided and overall drive operating efficiency is enhanced. Benefits include reduction in startup and maintenance costs, increased belt life, increased drive efficiency, and ensure drive components do not snag obstructions.

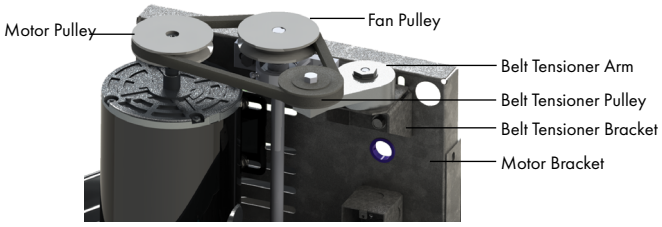

Roof Curb: Prefabricated heavy-gauge galvanized steel, welded construction, 12″ high (other heights are also available) with 1-1/2″ wood nailer. Assures perfect fit of exhauster to roof opening. Options include burglar bars, single or double pitch construction and hinged curbs for easy duct access.

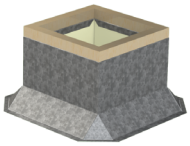

Sound Curb: Option of thermal acoustical lining or a complete maximum sound attenuating baffle system. Provision for mounting damper is available. Contact factory for information regarding effect on exhauster air performance and sound level.

Motor Operated Damper: Motor operated aluminum damper for positive closure against backdraft.

Automatic Damper: Automatic aluminum damper for ease in installation and effective backdraft protection.

Companion Gravity Units: Model RCX-II comes in a wide range of sizes and air capacities to provide relief or intake air to the system. Curbs and dampers are available to fit all sizes. Spun aluminum hoods provide a pleasing appearance, complementing the Model SDBD & SDB exhausters.

Special Coatings: Powered roof exhausters often require special coatings for protective and decorative purposes. Available coatings include: Synthetic Resin, Epoxy, and Heresite (air-dried phenolic). Contact your representative or the factory for more information on available coatings and colors.

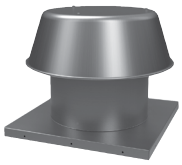

Curb Hinge Arrangement: The curb hinge arrangement provides easy access to the exhaust fan, backdraft damper, and duct for servicing and cleaning.

Speed Control (SDBe): Range of speed control options to provide flexible performance and precise airflow management across various applications.

CONSTRUCTION/SPECIFICATION CHECKLIST

Housing

- Curb cap has integral deep spun inlet for efficient performance and prepunched mounting holes for ease of installation.
- Lifting lugs for easy and safe placement of the fan on the roof.
- Spun aluminum hood and skirt for weather protection and attractive appearance.
- Heavy-gauge motor support for rigidity and strength.
- Neoprene isolators for reduction of vibration and sound.
- Conduit passage for easy electrical connection from below roof.
- Aluminum birdscreen is standard.

Centrifugal Wheel

- All aluminum wheel.
- Backward-inclined for efficiency at higher static pressure.
- Non-overloading for safe operation in ducted systems.
- Curved blades for efficiency and quiet operation.
- Dynamically balanced for smooth operation.

Motors

- 1 year warranty.
- Brands are nationally recognized and locally serviced.
- Single speed open drip-proof are standard.
- Explosion-proof, totally enclosed and two-speed motors are available.
- All motors are rated for continuous duty.
- 182T and larger motors shipped unmounted for field installation.
- Disconnect switch standard on single speed drip-proof and totally enclosed motors.

Electronically Commutated Motors (SDBe)

- Brands are nationally recognized and locally serviced
- Easy speed control from 0-10V
- Can be controlled by a PC or building management system
- All motors are rated for continuous duty
- Disconnect is standard
- Motors ship mounted as standard

Drives

- Sized for minimum 150% of drive horsepower.
- Machined cast iron adjustable motor pulleys.
- Adjustable base for belt tensioning.
- Non-static oil resistant V-Belts.

Bearings

- 5 year bearing warranty.
- Heavy-duty ball bearing type.
- Air handling with grease fittings.
- Sized for a minimum L10 life in excess of 100,000 hours

AMCA Seal

- Assures accuracy of Air and Sound Performance.

cULus Label

- cULus 705 listing assures electrical safety and reliability.
- cULus 705 must be specified when required.

MIAMI-DADE NOA, FLORIDA PRODUCT APPROVAL, AND TEXAS DEPARTMENT OF INSURANCE LISTING OPTION AVAILABLE

This model is designated to carry the Miami-Dade NOA and Florida Product Approval under Miami-Dade NOA# 20-1006.04 and Florida Product Approval FL37199. This model is also listed with the Texas Department of Insurance under Product Evaluation RV-126 for wind load and windborne debris resistance per IRC/IBC 2018. When this option is selected, the model will include tie downs, a fastened motor cover, and a reinforced birdscreen on the SDBD and SDB models. Curbs are required to be self-flashing, galvanized and 18 gauge steel.

MIAMI-DADE COUNTY APPROVED

HIGH WIND TIE DOWN KIT INCLUDES:

- Tie-downs
- Fastened motor cover
- Reinforced birdscreen on the SDBD and SDB models

SDB - SIZE 6

Motor HP	RPM		Static Pressure in Inches w.g.							
			0	0.125	0.25	0.375	0.5	0.625	0.75	0.875
1/4	700	CFM	131	41	-	-	-	-	-	-
		BHP	0.01	0.01	-	-	-	-	-	-
		Sones	1.2	1.2	-	-	-	-	-	-
1/4	850	CFM	159	104	-	-	-	-	-	-
		BHP	0.01	0.02	-	-	-	-	-	-
		Sones	2.1	2.0	-	-	-	-	-	-
1/4	900	CFM	169	118	-	-	-	-	-	-
		BHP	0.02	0.02	-	-	-	-	-	-
		Sones	2.4	2.3	-	-	-	-	-	-
1/4	1000	CFM	187	144	63	-	-	-	-	-
		BHP	0.02	0.03	0.03	-	-	-	-	-
		Sones	3.1	2.8	3.1	-	-	-	-	-
1/4	1100	CFM	206	167	112	-	-	-	-	-
		BHP	0.03	0.03	0.03	-	-	-	-	-
		Sones	3.9	3.6	3.8	-	-	-	-	-
1/4	1200	CFM	225	189	146	64	-	-	-	-
		BHP	0.04	0.04	0.04	0.04	-	-	-	-
		Sones	4.8	4.5	4.6	4.9	-	-	-	-
1/4	1300	CFM	244	212	174	116	-	-	-	-
		BHP	0.05	0.05	0.06	0.06	-	-	-	-
		Sones	5.8	5.5	5.4	5.7	-	-	-	-
1/4	1400	CFM	262	234	200	157	81	-	-	-
		BHP	0.07	0.07	0.07	0.07	0.07	-	-	-
		Sones	6.8	6.5	6.4	6.6	6.8	-	-	-
1/4	1500	CFM	281	255	223	188	133	56	-	-
		BHP	0.08	0.08	0.08	0.09	0.09	0.09	-	-
		Sones	7.9	7.6	7.4	7.5	7.7	7.9	-	-
1/4	1600	CFM	300	275	246	215	176	109	-	-
		BHP	0.10	0.10	0.10	0.10	0.11	0.11	-	-
		Sones	8.7	8.4	8.2	8.2	8.4	8.6	-	-
1/4	1700	CFM	319	295	268	241	208	160	92	-
		BHP	0.12	0.12	0.12	0.12	0.12	0.13	0.13	-
		Sones	9.5	9.2	8.9	9.0	9.1	9.2	9.4	-
1/4	1800	CFM	337	315	291	265	235	201	144	80
		BHP	0.14	0.14	0.14	0.14	0.15	0.15	0.15	0.15
		Sones	10.3	10.0	9.7	9.7	9.8	9.9	10.1	10.2
1/4	1900	CFM	356	335	313	288	262	232	193	132
		BHP	0.16	0.16	0.17	0.17	0.17	0.17	0.18	0.18
		Sones	11.1	10.8	10.5	10.4	10.5	10.6	10.8	10.9
1/4	2000	CFM	375	355	335	310	288	260	229	184
		BHP	0.19	0.19	0.19	0.19	0.20	0.20	0.20	0.21
		Sones	12.0	11.7	11.4	11.2	11.3	11.3	11.5	11.6

UL STANDARD 705

S&P USA Ventilation Systems, LLC., Div. of Soler & Palau Ventilation Group, certifies that the Models SDB shown herein are licensed to bear the AMCA Seal. The ratings shown are based on test and procedures performed in accordance with AMCA Publication 211 and AMCA Publication 311 and comply with the requirement of the AMCA Certified Ratings Program.

Power Ratings (BHP) does not include drive losses.
Performance certified is for installation type A - free inlet, free outlet.
Performance ratings include the effects of birdscreen in the airstream.
The sound ratings shown are loudness values in fan sones @ 5' (1.5m) in a hemispherical free field calculated per AMCA Standard 301. Values shown are for: Installation Type A: free inlet hemispherical sone levels.

SDB - SIZE 7

Motor HP	RPM		Static Pressure in Inches w.g.							
			0	0.125	0.25	0.375	0.5	0.625	0.75	0.875
1/4	700	CFM	192	44	-	-	-	-	-	-
		BHP	0.01	0.01	-	-	-	-	-	-
		Sones	1.3	1.4	-	-	-	-	-	-
1/4	800	CFM	219	102	-	-	-	-	-	-
		BHP	0.01	0.01	-	-	-	-	-	-
		Sones	2.1	2.0	-	-	-	-	-	-
1/4	900	CFM	246	150	-	-	-	-	-	-
		BHP	0.02	0.02	-	-	-	-	-	-
		Sones	2.7	2.4	-	-	-	-	-	-
1/4	1000	CFM	274	191	68	-	-	-	-	-
		BHP	0.02	0.03	0.03	-	-	-	-	-
		Sones	3.3	3.0	3.4	-	-	-	-	-
1/4	1100	CFM	301	227	126	-	-	-	-	-
		BHP	0.03	0.03	0.04	-	-	-	-	-
		Sones	4.0	3.7	4.1	-	-	-	-	-
1/4	1200	CFM	328	260	180	69	-	-	-	-
		BHP	0.04	0.04	0.05	0.05	-	-	-	-
		Sones	5.1	4.7	4.9	5.3	-	-	-	-
1/4	1300	CFM	356	293	224	127	-	-	-	-
		BHP	0.05	0.06	0.06	0.06	-	-	-	-
		Sones	6.1	5.7	5.7	6.1	-	-	-	-
1/4	1400	CFM	383	325	264	184	88	-	-	-
		BHP	0.07	0.07	0.07	0.07	0.07	-	-	-
		Sones	7.2	6.8	6.6	6.9	7.3	-	-	-
1/4	1500	CFM	411	357	301	234	146	-	-	-
		BHP	0.08	0.08	0.09	0.09	0.09	-	-	-
		Sones	8.5	8.1	7.7	7.9	8.3	-	-	-
1/4	1600	CFM	438	388	336	277	204	119	-	-
		BHP	0.10	0.10	0.10	0.11	0.11	0.11	-	-
		Sones	9.3	8.9	8.5	8.6	8.9	9.2	-	-
1/4	1700	CFM	465	419	369	318	256	177	-	-
		BHP	0.12	0.12	0.12	0.13	0.13	0.13	-	-
		Sones	10.1	9.7	9.4	9.2	9.5	9.8	-	-
1/4	1800	CFM	493	449	402	356	300	234	158	-
		BHP	0.14	0.14	0.15	0.15	0.15	0.15	0.16	-
		Sones	10.9	10.6	10.2	9.9	10.1	10.4	10.7	-
1/4	1900	CFM	520	478	434	391	342	286	216	145
		BHP	0.16	0.17	0.17	0.17	0.18	0.18	0.18	0.18
		Sones	11.7	11.4	11.1	10.8	10.8	11.1	11.3	11.6
1/4	2000	CFM	547	507	466	425	381	330	272	202
		BHP	0.19	0.19	0.20	0.20	0.20	0.21	0.21	0.21
		Sones	12.5	12.2	11.9	11.7	11.5	11.7	12.0	12.3

UL STANDARD 705

S&P USA Ventilation Systems, LLC., Div. of Soler & Palau Ventilation Group, certifies that the Models SDB shown herein are licensed to bear the AMCA Seal. The ratings shown are based on test and procedures performed in accordance with AMCA Publication 211 and AMCA Publication 311 and comply with the requirement of the AMCA Certified Ratings Program.

Power Ratings (BHP) does not include drive losses.
Performance certified is for installation type A - free inlet, free outlet.
Performance ratings include the effects of birdscreen in the airstream.
The sound ratings shown are loudness values in fan sones @ 5' (1.5m) in a hemispherical free field calculated per AMCA Standard 301. Values shown are for: Installation Type A: free inlet hemispherical sone levels.

SDB - SIZE 8

Motor HP	RPM		Static Pressure in Inches w.g.								
			0	0.125	0.25	0.375	0.5	0.625	0.75	0.875	1
1/4	700	CFM	377	194	-	-	-	-	-	-	-
		BHP	0.01	0.01	-	-	-	-	-	-	-
		Sones	2.0	1.4	-	-	-	-	-	-	-
1/4	800	CFM	431	302	-	-	-	-	-	-	-
		BHP	0.02	0.02	-	-	-	-	-	-	-
		Sones	2.9	2.4	-	-	-	-	-	-	-
1/4	900	CFM	485	378	-	-	-	-	-	-	-
		BHP	0.02	0.03	-	-	-	-	-	-	-
		Sones	3.8	3.1	-	-	-	-	-	-	-
1/4	1000	CFM	539	445	293	-	-	-	-	-	-
		BHP	0.03	0.03	0.04	-	-	-	-	-	-
		Sones	4.6	3.9	3.6	-	-	-	-	-	-
1/4	1100	CFM	593	508	403	-	-	-	-	-	-
		BHP	0.04	0.04	0.05	-	-	-	-	-	-
		Sones	5.4	4.7	4.6	-	-	-	-	-	-
1/4	1200	CFM	647	570	481	310	-	-	-	-	-
		BHP	0.05	0.05	0.06	0.06	-	-	-	-	-
		Sones	6.3	5.7	5.6	5.2	-	-	-	-	-
1/4	1300	CFM	701	630	553	450	-	-	-	-	-
		BHP	0.06	0.07	0.07	0.08	-	-	-	-	-
		Sones	7.2	6.8	6.6	6.4	-	-	-	-	-
1/4	1400	CFM	754	688	620	535	-	-	-	-	-
		BHP	0.08	0.08	0.09	0.10	-	-	-	-	-
		Sones	8.3	7.9	7.6	7.6	-	-	-	-	-
1/4	1500	CFM	808	746	684	612	519	-	-	-	-
		BHP	0.10	0.10	0.11	0.12	0.12	-	-	-	-
		Sones	9.5	9.0	8.6	8.7	8.5	-	-	-	-
1/4	1600	CFM	862	803	747	683	605	492	-	-	-
		BHP	0.12	0.12	0.13	0.14	0.14	0.14	-	-	-
		Sones	10.4	10.0	9.6	9.5	9.5	9.1	-	-	-
1/4	1700	CFM	916	860	808	750	683	602	445	-	-
		BHP	0.14	0.15	0.16	0.16	0.17	0.17	0.17	-	-
		Sones	11.6	10.9	10.6	10.4	10.4	10.2	9.9	-	-
1/4	1800	CFM	970	917	868	814	755	685	598	395	-
		BHP	0.17	0.18	0.18	0.19	0.20	0.20	0.20	0.19	-
		Sones	12.8	12.1	11.6	11.3	11.3	11.3	10.9	10.6	-
1/4	1900	CFM	1024	973	927	877	824	763	693	592	-
		BHP	0.20	0.21	0.21	0.22	0.23	0.24	0.24	0.24	-
		Sones	13.8	13.2	12.6	12.3	12.2	12.2	12.1	11.8	-
1/3	2000	CFM	1078	1029	985	939	890	836	773	702	586
		BHP	0.23	0.24	0.25	0.25	0.27	0.27	0.28	0.28	0.28
		Sones	15.0	14.3	13.8	13.3	13.1	13.1	13.2	12.9	12.7
1/3	2100	CFM	1132	1085	1043	1000	954	905	850	787	712
		BHP	0.26	0.28	0.28	0.29	0.30	0.31	0.32	0.32	0.33
		Sones	16.1	15.5	15.0	14.5	14.0	14.1	14.1	14.1	13.8

S&P USA Ventilation Systems, LLC., Div. of Soler & Palau Ventilation Group, certifies that the Models SDB shown herein are licensed to bear the AMCA Seal. The ratings shown are based on test and procedures performed in accordance with AMCA Publication 211 and AMCA Publication 311 and comply with the requirement of the AMCA Certified Ratings Program.

UL STANDARD 705

Power Ratings (BHP) does not include drive losses.
Performance certified is for installation type A - free inlet, free outlet.
Performance ratings include the effects of birdscreen in the airstream.
The sound ratings shown are loudness values in fan sones @ 5' (1.5m) in a hemispherical free field calculated per AMCA Standard 301. Values shown are for: Installation Type A: free inlet hemispherical sone levels.

SDB - SIZE 10

Motor HP	RPM		Static Pressure in Inches w.g.								
			0	0.125	0.25	0.375	0.5	0.625	0.75	0.875	1
1/4	700	CFM	586	423	-	-	-	-	-	-	-
		BHP	0.02	0.02	-	-	-	-	-	-	-
		Sones	3.1	2.6	-	-	-	-	-	-	-
1/4	800	CFM	669	537	244	-	-	-	-	-	-
		BHP	0.02	0.03	0.03	-	-	-	-	-	-
		Sones	4.1	3.5	3.5	-	-	-	-	-	-
1/4	900	CFM	753	639	479	-	-	-	-	-	-
		BHP	0.03	0.04	0.05	-	-	-	-	-	-
		Sones	5.1	4.5	4.3	-	-	-	-	-	-
1/4	1000	CFM	837	737	610	374	-	-	-	-	-
		BHP	0.05	0.06	0.06	0.06	-	-	-	-	-
		Sones	6.0	5.5	5.2	5.3	-	-	-	-	-
1/4	1100	CFM	920	832	725	583	-	-	-	-	-
		BHP	0.06	0.07	0.08	0.08	-	-	-	-	-
		Sones	7.1	6.6	6.4	6.3	-	-	-	-	-
1/4	1200	CFM	1004	924	830	717	562	-	-	-	-
		BHP	0.08	0.09	0.10	0.11	0.11	-	-	-	-
		Sones	8.3	7.8	7.5	7.3	7.4	-	-	-	-
1/4	1300	CFM	1088	1014	931	836	716	513	-	-	-
		BHP	0.10	0.11	0.12	0.13	0.14	0.14	-	-	-
		Sones	9.6	9.1	8.8	8.6	8.5	8.7	-	-	-
1/4	1400	CFM	1171	1104	1029	945	846	725	-	-	-
		BHP	0.13	0.14	0.15	0.16	0.17	0.17	-	-	-
		Sones	11.1	10.5	10.1	10.0	9.8	9.9	-	-	-
1/3	1500	CFM	1255	1192	1124	1048	964	863	744	-	-
		BHP	0.16	0.17	0.18	0.19	0.20	0.21	0.21	-	-
		Sones	12.6	12.1	11.5	11.4	11.3	11.2	11.3	-	-
1/3	1600	CFM	1339	1280	1217	1148	1073	988	888	768	-
		BHP	0.19	0.21	0.22	0.23	0.24	0.25	0.26	0.26	-
		Sones	13.8	13.3	12.8	12.6	12.5	12.3	12.3	12.4	-
1/3	1700	CFM	1422	1368	1309	1246	1177	1103	1018	920	801
		BHP	0.23	0.24	0.26	0.27	0.28	0.30	0.31	0.31	0.31
		Sones	15.1	14.6	14.1	13.8	13.7	13.5	13.4	13.5	13.6

Power Ratings (BHP) does not include drive losses.
Performance certified is for installation type A - free inlet, free outlet.
Performance ratings include the effects of birdscreen in the airstream.
The sound ratings shown are loudness values in fan sones @ 5' (1.5m) in a hemispherical free field calculated per AMCA Standard 301. Values shown are for: Installation Type A: free inlet hemispherical sone levels.

S&P USA Ventilation Systems, LLC., Div. of Soler & Palau Ventilation Group, certifies that the Models SDB shown herein are licensed to bear the AMCA Seal. The ratings shown are based on test and procedures performed in accordance with AMCA Publication 211 and AMCA Publication 311 and comply with the requirement of the AMCA Certified Ratings Program.

UL STANDARD 705

SDB - SIZE 12

Motor HP	RPM		Static Pressure in Inches w.g.									
			0	0.125	0.25	0.375	0.5	0.625	0.75	0.875	1	1.25
1/4	600	CFM	660	425	-	-	-	-	-	-	-	-
		BHP	0.01	0.02	-	-	-	-	-	-	-	-
		Sones	2.5	2.1	-	-	-	-	-	-	-	-
1/4	700	CFM	770	585	-	-	-	-	-	-	-	-
		BHP	0.02	0.03	-	-	-	-	-	-	-	-
		Sones	3.5	3.2	-	-	-	-	-	-	-	-
1/4	800	CFM	880	726	509	-	-	-	-	-	-	-
		BHP	0.03	0.04	0.05	-	-	-	-	-	-	-
		Sones	4.5	4.2	3.9	-	-	-	-	-	-	-
1/4	900	CFM	990	859	690	-	-	-	-	-	-	-
		BHP	0.05	0.06	0.07	-	-	-	-	-	-	-
		Sones	5.6	5.3	5.0	-	-	-	-	-	-	-
1/4	1000	CFM	1100	987	842	665	-	-	-	-	-	-
		BHP	0.07	0.08	0.09	0.09	-	-	-	-	-	-
		Sones	6.6	6.4	6.1	5.9	-	-	-	-	-	-
1/4	1100	CFM	1210	1108	983	842	638	-	-	-	-	-
		BHP	0.09	0.10	0.11	0.12	0.12	-	-	-	-	-
		Sones	7.7	7.5	7.2	7.0	6.8	-	-	-	-	-
1/4	1200	CFM	1320	1227	1119	995	850	-	-	-	-	-
		BHP	0.11	0.13	0.14	0.15	0.16	-	-	-	-	-
		Sones	8.9	8.7	8.4	8.2	8.0	-	-	-	-	-
1/4	1300	CFM	1430	1343	1251	1138	1020	876	-	-	-	-
		BHP	0.15	0.16	0.17	0.19	0.19	0.20	-	-	-	-
		Sones	10.2	10.0	9.7	9.4	9.2	9.1	-	-	-	-
1/4	1400	CFM	1540	1459	1378	1277	1170	1053	913	-	-	-
		BHP	0.18	0.20	0.21	0.23	0.24	0.25	0.25	-	-	-
		Sones	11.5	11.3	11.1	10.8	10.5	10.4	10.3	-	-	-
1/3	1500	CFM	1650	1574	1500	1411	1313	1212	1096	960	-	-
		BHP	0.22	0.24	0.26	0.27	0.28	0.30	0.30	0.31	-	-
		Sones	12.9	12.7	12.6	12.3	11.9	11.8	11.7	11.6	-	-
1/2	1600	CFM	1760	1689	1620	1542	1452	1358	1261	1147	1019	-
		BHP	0.27	0.29	0.31	0.32	0.34	0.35	0.36	0.37	0.37	-
		Sones	14.2	14.0	13.9	13.7	13.4	13.1	12.9	12.8	12.7	-
1/2	1700	CFM	1870	1803	1738	1669	1587	1500	1411	1318	1207	872
		BHP	0.32	0.34	0.36	0.38	0.40	0.41	0.43	0.44	0.44	0.43
		Sones	15.6	15.4	15.3	15.1	14.8	14.5	14.3	14.2	14.0	13.9

Power Ratings (BHP) does not include drive losses.
Performance certified is for installation type A - free inlet, free outlet.
Performance ratings include the effects of birdscreen in the airstream.
The sound ratings shown are loudness values in fan sones @ 5' (1.5m) in a hemispherical free field calculated per AMCA Standard 301. Values shown are for: Installation Type A: free inlet hemispherical sone levels.

S&P USA Ventilation Systems, LLC., Div. of Soler & Palau Ventilation Group, certifies that the Models SDB shown herein are licensed to bear the AMCA Seal. The ratings shown are based on test and procedures performed in accordance with AMCA Publication 211 and AMCA Publication 311 and comply with the requirement of the AMCA Certified Ratings Program.

UL STANDARD 705

SDB - SIZE 14

Motor HP	RPM		Static Pressure in Inches w.g.										
			0	0.125	0.25	0.375	0.5	0.625	0.75	0.875	1	1.25	1.5
1/4	550	CFM	1108	802	-	-	-	-	-	-	-	-	-
		BHP	0.03	0.03	-	-	-	-	-	-	-	-	-
		Sones	3.4	2.4	-	-	-	-	-	-	-	-	-
1/4	650	CFM	1309	1070	-	-	-	-	-	-	-	-	-
		BHP	0.04	0.05	-	-	-	-	-	-	-	-	-
		Sones	4.6	3.7	-	-	-	-	-	-	-	-	-
1/4	750	CFM	1511	1312	1048	-	-	-	-	-	-	-	-
		BHP	0.07	0.08	0.09	-	-	-	-	-	-	-	-
		Sones	6.2	5.2	4.8	-	-	-	-	-	-	-	-
1/4	850	CFM	1712	1539	1332	1016	-	-	-	-	-	-	-
		BHP	0.10	0.11	0.12	0.12	-	-	-	-	-	-	-
		Sones	7.8	6.8	6.1	6.0	-	-	-	-	-	-	-
1/4	950	CFM	1914	1759	1591	1382	-	-	-	-	-	-	-
		BHP	0.13	0.15	0.16	0.17	-	-	-	-	-	-	-
		Sones	9.1	8.3	7.5	7.1	-	-	-	-	-	-	-
1/4	1050	CFM	2115	1975	1831	1655	1446	-	-	-	-	-	-
		BHP	0.18	0.19	0.21	0.23	0.23	-	-	-	-	-	-
		Sones	10.6	9.8	9.1	8.7	8.4	-	-	-	-	-	-
1/3	1150	CFM	2316	2188	2060	1914	1745	1531	-	-	-	-	-
		BHP	0.23	0.25	0.27	0.29	0.30	0.31	-	-	-	-	-
		Sones	12.2	11.5	10.9	10.4	10.0	9.9	-	-	-	-	-
1/2	1250	CFM	2518	2399	2283	2157	2011	1852	1639	-	-	-	-
		BHP	0.30	0.31	0.34	0.36	0.38	0.39	0.40	-	-	-	-
		Sones	14.0	13.4	12.8	12.3	11.9	11.5	11.5	-	-	-	-
1/2	1350	CFM	2719	2609	2502	2390	2266	2122	1973	1770	-	-	-
		BHP	0.38	0.39	0.42	0.44	0.46	0.48	0.49	0.50	-	-	-
		Sones	16.1	15.5	14.8	14.3	13.9	13.4	13.1	13.1	-	-	-
3/4	1450	CFM	2921	2818	2718	2616	2507	2384	2248	2107	1918	-	-
		BHP	0.47	0.48	0.51	0.53	0.56	0.58	0.60	0.61	0.62	-	-
		Sones	18.1	17.5	17.0	16.4	16.0	15.6	15.3	14.9	14.9	-	-
3/4	1550	CFM	3122	3026	2931	2838	2739	2633	2512	2385	2252	1846	-
		BHP	0.57	0.59	0.61	0.64	0.67	0.70	0.72	0.74	0.75	0.75	-
		Sones	20.2	19.6	19.0	18.3	17.8	17.5	17.2	16.8	16.5	16.9	-
1	1650	CFM	3324	3233	3144	3056	2966	2871	2766	2651	2531	2251	1756
		BHP	0.69	0.71	0.73	0.76	0.79	0.82	0.85	0.87	0.89	0.91	0.87
		Sones	22.0	21.4	20.8	20.3	19.7	19.4	19.0	18.7	18.3	17.8	18.6
1	1750	CFM	3525	3440	3355	3273	3189	3102	3009	2908	2797	2568	2247
		BHP	0.83	0.84	0.86	0.89	0.93	0.96	0.99	1.02	1.04	1.07	1.08
		Sones	24.2	23.6	22.9	22.2	21.6	21.1	20.7	20.4	20.1	19.5	19.6

Power Ratings (BHP) does not include drive losses.
Performance certified is for installation type A - free inlet, free outlet.
Performance ratings include the effects of birdscreen in the airstream.
The sound ratings shown are loudness values in fan sones @ 5' (1.5m) in a hemispherical free field calculated per AMCA Standard 301. Values shown are for: Installation Type A: free inlet hemispherical sone levels.

S&P USA Ventilation Systems, LLC., Div. of Soler & Palau Ventilation Group, certifies that the Models SDB shown herein are licensed to bear the AMCA Seal. The ratings shown are based on test and procedures performed in accordance with AMCA Publication 211 and AMCA Publication 311 and comply with the requirement of the AMCA Certified Ratings Program.

UL STANDARD 705

SDB - SIZE 15

Motor HP	RPM		Static Pressure in Inches w.g.										
			0	0.125	0.25	0.375	0.5	0.625	0.75	0.875	1	1.25	1.5
1/4	500	CFM	1164	843	-	-	-	-	-	-	-	-	-
		BHP	0.02	0.03	-	-	-	-	-	-	-	-	-
		Sones	3.3	2.4	-	-	-	-	-	-	-	-	-
1/4	600	CFM	1396	1146	543	-	-	-	-	-	-	-	-
		BHP	0.04	0.05	0.05	-	-	-	-	-	-	-	-
		Sones	4.6	3.9	2.8	-	-	-	-	-	-	-	-
1/4	700	CFM	1629	1421	1168	-	-	-	-	-	-	-	-
		BHP	0.06	0.08	0.09	-	-	-	-	-	-	-	-
		Sones	6.1	5.5	4.6	-	-	-	-	-	-	-	-
1/4	800	CFM	1862	1685	1478	1206	-	-	-	-	-	-	-
		BHP	0.09	0.11	0.12	0.13	-	-	-	-	-	-	-
		Sones	7.9	7.2	6.6	5.6	-	-	-	-	-	-	-
1/4	900	CFM	2095	1944	1766	1570	1278	-	-	-	-	-	-
		BHP	0.13	0.15	0.17	0.18	0.19	-	-	-	-	-	-
		Sones	9.7	9.0	8.3	7.7	6.7	-	-	-	-	-	-
1/3	1000	CFM	2327	2197	2037	1870	1687	1393	-	-	-	-	-
		BHP	0.18	0.20	0.22	0.24	0.26	0.26	-	-	-	-	-
		Sones	11.1	10.5	10.0	9.5	8.7	7.9	-	-	-	-	-
1/3	1100	CFM	2560	2445	2301	2156	1996	1823	1553	-	-	-	-
		BHP	0.23	0.26	0.28	0.31	0.33	0.35	0.35	-	-	-	-
		Sones	12.7	12.2	11.7	11.2	10.7	9.9	9.1	-	-	-	-
1/2	1200	CFM	2793	2690	2562	2429	2291	2143	1980	1739	-	-	-
		BHP	0.30	0.33	0.36	0.38	0.41	0.43	0.45	0.45	-	-	-
		Sones	14.3	13.9	13.5	13.1	12.6	12.1	11.3	10.5	-	-	-
3/4	1300	CFM	3026	2932	2818	2694	2572	2441	2304	2152	1938	-	-
		BHP	0.39	0.42	0.44	0.47	0.50	0.53	0.55	0.57	0.57	-	-
		Sones	16.3	15.8	15.3	15.0	14.7	14.5	13.9	12.9	12.0	-	-
3/4	1400	CFM	3258	3172	3071	2956	2843	2728	2602	2476	2336	1876	-
		BHP	0.48	0.51	0.55	0.57	0.61	0.64	0.66	0.69	0.71	0.71	-
		Sones	18.6	18.1	17.7	17.3	17.0	16.9	16.7	16.1	14.9	13.2	-
1	1500	CFM	3491	3412	3321	3216	3107	3003	2893	2775	2657	2373	-
		BHP	0.59	0.63	0.66	0.69	0.72	0.76	0.79	0.82	0.84	0.88	-
		Sones	20.9	20.5	20.0	19.6	19.5	19.3	19.2	19.1	18.4	16.1	-
1	1600	CFM	3724	3650	3567	3472	3370	3271	3172	3067	2956	2729	2412
		BHP	0.72	0.76	0.79	0.83	0.86	0.89	0.93	0.96	0.99	1.05	1.07
		Sones	23.3	22.9	22.4	21.9	21.5	21.1	21.0	20.8	20.7	19.0	17.3

Power Ratings (BHP) does not include drive losses.
Performance certified is for installation type A - free inlet, free outlet.
Performance ratings include the effects of birdscreen in the airstream.
The sound ratings shown are loudness values in fan sones @ 5' (1.5m) in a hemispherical free field calculated per AMCA Standard 301. Values shown are for: Installation Type A: free inlet hemispherical sone levels.

S&P USA Ventilation Systems, LLC., Div. of Soler & Palau Ventilation Group, certifies that the Models SDB shown herein are licensed to bear the AMCA Seal. The ratings shown are based on test and procedures performed in accordance with AMCA Publication 211 and AMCA Publication 311 and comply with the requirement of the AMCA Certified Ratings Program.

UL STANDARD 705

SDB - SIZE 16

Motor HP	RPM		Static Pressure in Inches w.g.										
			0	0.125	0.25	0.375	0.5	0.625	0.75	0.875	1	1.25	1.5
1/4	550	CFM	1568	1275	-	-	-	-	-	-	-	-	-
		BHP	0.04	0.06	-	-	-	-	-	-	-	-	-
		Sones	4.4	3.5	-	-	-	-	-	-	-	-	-
1/4	650	CFM	1853	1614	1292	-	-	-	-	-	-	-	-
		BHP	0.07	0.08	0.10	-	-	-	-	-	-	-	-
		Sones	6.0	5.1	4.3	-	-	-	-	-	-	-	-
1/4	750	CFM	2139	1936	1702	1356	-	-	-	-	-	-	-
		BHP	0.10	0.12	0.14	0.15	-	-	-	-	-	-	-
		Sones	7.8	7.3	6.2	5.6	-	-	-	-	-	-	-
1/4	850	CFM	2424	2249	2052	1817	1502	-	-	-	-	-	-
		BHP	0.15	0.17	0.20	0.21	0.22	-	-	-	-	-	-
		Sones	9.5	8.9	8.1	7.3	6.9	-	-	-	-	-	-
1/3	950	CFM	2709	2556	2383	2198	1964	1678	-	-	-	-	-
		BHP	0.21	0.23	0.26	0.28	0.30	0.31	-	-	-	-	-
		Sones	11.2	10.7	10.1	9.2	8.6	8.2	-	-	-	-	-
1/2	1050	CFM	2994	2857	2704	2543	2368	2142	1878	-	-	-	-
		BHP	0.28	0.31	0.34	0.37	0.39	0.41	0.41	-	-	-	-
		Sones	12.9	12.5	12.1	11.3	10.5	10.0	9.6	-	-	-	-
3/4	1150	CFM	3279	3156	3019	2874	2724	2557	2345	2095	-	-	-
		BHP	0.37	0.40	0.43	0.46	0.49	0.52	0.53	0.54	-	-	-
		Sones	14.7	14.4	14.0	13.4	12.6	11.9	11.5	11.3	-	-	-
3/4	1250	CFM	3564	3452	3329	3197	3062	2921	2763	2568	2348	-	-
		BHP	0.47	0.51	0.54	0.58	0.61	0.64	0.66	0.68	0.70	-	-
		Sones	16.9	16.5	16.3	16.0	15.1	14.4	13.7	13.5	13.3	-	-
1	1350	CFM	3849	3746	3634	3514	3391	3264	3132	2983	2805	2402	-
		BHP	0.59	0.63	0.67	0.71	0.75	0.78	0.81	0.84	0.86	0.88	-
		Sones	19.4	19.2	18.9	18.6	18.0	17.3	16.5	15.8	15.5	15.1	-
1	1450	CFM	4135	4038	3936	3827	3713	3597	3478	3354	3216	2875	2467
		BHP	0.74	0.78	0.82	0.86	0.90	0.94	0.97	1.01	1.04	1.08	1.08
		Sones	22.2	21.9	21.7	21.5	21.3	20.4	19.6	18.8	18.0	17.5	17.0

Power Ratings (BHP) does not include drive losses.
Performance certified is for installation type A - free inlet, free outlet.
Performance ratings include the effects of birdscreen in the airstream.
The sound ratings shown are loudness values in fan sones @ 5' (1.5m) in a hemispherical free field calculated per AMCA Standard 301. Values shown are for: Installation Type A: free inlet hemispherical sone levels.

S&P USA Ventilation Systems, LLC., Div. of Soler & Palau Ventilation Group, certifies that the Models SDB shown herein are licensed to bear the AMCA Seal. The ratings shown are based on test and procedures performed in accordance with AMCA Publication 211 and AMCA Publication 311 and comply with the requirement of the AMCA Certified Ratings Program.

UL STANDARD 705

SDB - SIZE 18

Motor HP	RPM		Static Pressure in Inches w.g.											
			0	0.125	0.25	0.375	0.5	0.625	0.75	0.875	1	1.25	1.5	1.75
1/4	550	CFM	2195	1889	1512	-	-	-	-	-	-	-	-	-
		BHP	0.10	0.11	0.12	-	-	-	-	-	-	-	-	-
		Sones	6.1	5.0	4.5	-	-	-	-	-	-	-	-	-
1/4	650	CFM	2594	2339	2074	1678	-	-	-	-	-	-	-	-
		BHP	0.16	0.18	0.19	0.20	-	-	-	-	-	-	-	-
		Sones	7.9	6.9	6.4	6.0	-	-	-	-	-	-	-	-
1/3	750	CFM	2993	2770	2542	2309	1934	1389	-	-	-	-	-	-
		BHP	0.25	0.27	0.29	0.30	0.30	0.28	-	-	-	-	-	-
		Sones	9.9	9.0	8.4	8.0	7.8	7.6	-	-	-	-	-	-
1/2	850	CFM	3392	3192	3001	2795	2581	2248	1835	-	-	-	-	-
		BHP	0.37	0.39	0.41	0.43	0.44	0.44	0.42	-	-	-	-	-
		Sones	12.5	11.5	10.7	10.3	9.9	9.7	9.6	-	-	-	-	-
3/4	950	CFM	3791	3610	3442	3260	3081	2883	2601	2250	1778	-	-	-
		BHP	0.51	0.53	0.56	0.58	0.60	0.62	0.62	0.61	0.57	-	-	-
		Sones	15.3	14.3	13.5	12.9	12.3	12.0	11.8	11.7	11.6	-	-	-
1	1050	CFM	4190	4026	3871	3716	3546	3387	3209	2974	2653	-	-	-
		BHP	0.69	0.72	0.74	0.77	0.79	0.82	0.83	0.84	0.83	-	-	-
		Sones	17.9	17.0	16.3	15.6	15.1	14.7	14.4	14.1	14.0	-	-	-
1-1/2	1150	CFM	4590	4439	4295	4157	4008	3852	3709	3550	3352	2797	-	-
		BHP	0.90	0.93	0.96	0.99	1.02	1.05	1.07	1.09	1.10	1.08	-	-
		Sones	20.3	19.6	18.9	18.3	17.7	17.3	17.0	16.7	16.5	16.2	-	-
1-1/2	1250	CFM	4989	4849	4715	4588	4459	4317	4174	4043	3901	3522	2992	2240
		BHP	1.16	1.19	1.23	1.26	1.29	1.32	1.35	1.37	1.40	1.41	1.39	1.27
		Sones	22.8	22.2	21.6	20.9	20.5	20.1	19.8	19.5	19.3	18.8	18.4	18.2
2	1350	CFM	5388	5258	5133	5013	4896	4772	4640	4507	4387	4113	3725	3231
		BHP	1.46	1.50	1.53	1.57	1.60	1.63	1.67	1.70	1.73	1.77	1.78	1.75
		Sones	25.4	24.8	24.2	23.7	23.2	22.9	22.6	22.3	22.1	21.5	21.2	20.9
2	1450	CFM	5787	5666	5548	5435	5326	5215	5098	4975	4850	4622	4347	3965
		BHP	1.81	1.85	1.89	1.92	1.96	2.00	2.03	2.07	2.10	2.16	2.20	2.21
		Sones	28.1	27.5	27.0	26.5	26.2	25.8	25.5	25.3	25.0	24.5	24.0	23.7

Power Ratings (BHP) does not include drive losses.
Performance certified is for installation type A - free inlet, free outlet.
Performance ratings include the effects of birdscreen in the airstream.
The sound ratings shown are loudness values in fan sones @ 5' (1.5m) in a hemispherical free field calculated per AMCA Standard 301. Values shown are for: Installation Type A: free inlet hemispherical sone levels.

S&P USA Ventilation Systems, LLC., Div. of Soler & Palau Ventilation Group, certifies that the Models SDB shown herein are licensed to bear the AMCA Seal. The ratings shown are based on test and procedures performed in accordance with AMCA Publication 211 and AMCA Publication 311 and comply with the requirement of the AMCA Certified Ratings Program.

UL STANDARD 705

SDBe - Size 18

Motor HP	RPM		Static Pressure (in. wg)												
			0.00	0.13	0.25	0.38	0.50	0.63	0.75	0.88	1.00	1.25	1.50	1.75	2.00
2HP 1800 RPM	550	CFM	2170	1897	1588	978	-	-	-	-	-	-	-	-	-
		BHP	0.11	0.13	0.14	0.12	-	-	-	-	-	-	-	-	-
		SONES	12.3	7.0	4.7	3.9	-	-	-	-	-	-	-	-	-
	600	CFM	2367	2119	1855	1474	-	-	-	-	-	-	-	-	-
		BHP	0.15	0.16	0.18	0.18	-	-	-	-	-	-	-	-	-
		SONES	13.3	8.5	6.1	5.1	-	-	-	-	-	-	-	-	-
	650	CFM	2564	2335	2096	1806	1330	-	-	-	-	-	-	-	-
		BHP	0.19	0.21	0.22	0.23	0.21	-	-	-	-	-	-	-	-
		SONES	14.3	9.9	7.6	6.4	5.7	-	-	-	-	-	-	-	-
	700	CFM	2762	2547	2326	2092	1754	1053	-	-	-	-	-	-	-
		BHP	0.23	0.25	0.27	0.29	0.28	0.23	-	-	-	-	-	-	-
		SONES	15.3	11.3	9.0	7.7	7.0	6.4	-	-	-	-	-	-	-
	750	CFM	2959	2757	2557	2346	2082	1710	-	-	-	-	-	-	-
		BHP	0.29	0.31	0.33	0.36	0.35	0.34	-	-	-	-	-	-	-
		SONES	16.4	13.0	10.2	8.9	8.1	7.5	-	-	-	-	-	-	-
	800	CFM	3156	2966	2782	2583	2370	2082	1672	-	-	-	-	-	-
		BHP	0.35	0.37	0.39	0.42	0.44	0.42	0.40	-	-	-	-	-	-
		SONES	17.5	14.4	11.8	10.3	9.3	8.7	8.1	-	-	-	-	-	-
	850	CFM	3354	3173	3004	2815	2630	2397	2095	1642	-	-	-	-	-
		BHP	0.42	0.44	0.47	0.49	0.52	0.51	0.51	0.47	-	-	-	-	-
		SONES	18.5	15.7	13.2	11.7	10.4	9.8	9.3	8.8	-	-	-	-	-
	900	CFM	3551	3380	3220	3046	2871	2680	2435	2126	1627	-	-	-	-
		BHP	0.50	0.52	0.55	0.57	0.60	0.62	0.61	0.59	0.54	-	-	-	-
		SONES	19.6	17.0	14.7	13.2	11.7	11.2	10.7	10.1	9.6	-	-	-	-
	950	CFM	3748	3585	3433	3274	3105	2939	2736	2486	2174	-	-	-	-
		BHP	0.58	0.61	0.64	0.66	0.69	0.73	0.73	0.71	0.69	-	-	-	-
		SONES	20.7	18.3	16.1	14.6	13.5	12.5	12.0	11.5	11.0	-	-	-	-
	1000	CFM	3945	3790	3645	3497	3337	3181	3012	2801	2552	1710	-	-	-
		BHP	0.68	0.71	0.74	0.76	0.79	0.83	0.86	0.84	0.83	0.72	-	-	-
		SONES	21.8	19.6	17.5	16.1	14.9	14.1	13.5	13.0	12.5	11.6	-	-	-
	1050	CFM	4143	3995	3855	3718	3567	3415	3266	3090	2879	2325	-	-	-
		BHP	0.79	0.82	0.85	0.88	0.90	0.94	0.98	0.99	0.96	0.93	-	-	-
		SONES	23.0	20.9	19.0	17.5	16.5	15.5	14.9	14.4	14.0	13.1	-	-	-
	1100	CFM	4340	4198	4064	3934	3794	3647	3506	3357	3177	2725	1955	-	-
		BHP	0.91	0.94	0.97	1.00	1.03	1.05	1.10	1.14	1.13	1.10	0.98	-	-
		SONES	24.2	22.2	20.4	18.9	18.0	17.1	16.5	16.0	15.5	14.6	13.8	-	-
	1150	CFM	4537	4402	4272	4147	4018	3878	3740	3604	3453	3067	2545	-	-
		BHP	1.04	1.07	1.10	1.13	1.16	1.19	1.23	1.28	1.31	1.26	1.22	-	-
		SONES	25.4	23.4	21.8	20.3	19.3	18.6	18.1	17.6	17.1	16.2	15.5	-	-
	1200	CFM	4734	4604	4479	4359	4239	4107	3971	3843	3709	3377	2948	2291	-
		BHP	1.18	1.21	1.24	1.28	1.31	1.34	1.37	1.43	1.48	1.45	1.42	1.31	-
		SONES	26.6	24.7	23.2	21.8	20.8	20.0	19.6	19.1	18.7	17.9	17.1	16.4	-
	1250	CFM	4932	4807	4685	4570	4455	4332	4204	4076	3952	3666	3297	2818	1838
		BHP	1.33	1.36	1.40	1.43	1.47	1.50	1.53	1.58	1.63	1.67	1.62	1.57	1.32
		SONES	27.8	26.1	24.6	23.3	22.3	21.7	21.2	20.8	20.3	19.5	18.7	18.0	17.3
	1300	CFM	5129	5008	4892	4780	4670	4555	4437	4307	4193	3936	3612	3213	2661
		BHP	1.50	1.53	1.57	1.60	1.64	1.68	1.71	1.74	1.80	1.89	1.83	1.81	1.71
		SONES	29.0	27.4	25.9	24.7	23.7	23.2	22.8	22.4	22.0	21.2	20.4	19.7	18.9
	1350	CFM	5326	5210	5097	4989	4883	4775	4659	4539	4422	4188	3907	3559	3128
		BHP	1.68	1.71	1.75	1.79	1.83	1.86	1.90	1.93	1.98	2.09	2.09	2.04	2.00
		SONES	30.3	28.7	27.3	26.1	25.3	24.9	24.5	24.1	23.6	22.9	22.1	21.4	20.8
	1400	CFM	5523	5411	5302	5197	5095	4992	4883	4773	4653	4431	4183	3876	3508
		BHP	1.87	1.91	1.95	1.98	2.02	2.06	2.10	2.13	2.17	2.29	2.35	2.29	2.26
		SONES	31.5	30.1	28.7	27.5	26.6	26.4	26.0	25.6	25.3	24.5	23.8	23.1	22.4
	1450	CFM	5721	5612	5507	5404	5305	5206	5105	4996	4885	4667	4445	4173	3850
		BHP	2.08	2.12	2.16	2.20	2.24	2.28	2.32	2.35	2.39	2.50	2.62	2.58	2.53
		SONES	32.8	31.4	30.1	28.9	28.0	27.8	27.4	27.0	26.7	26.0	25.3	24.6	24.0

Power Ratings (BHP) does not include drive losses.
Performance certified is for installation type A - free inlet, free outlet.
Performance ratings include the effects of birdscreen in the airstream.
The sound ratings shown are loudness values in fan sones @ 5' (1.5m) in a hemispherical free field calculated per AMCA Standard 301.
Values shown are for: Installation Type A: free inlet hemispherical sone levels.

S&P USA Ventilation Systems, LLC., Div. of Soler & Palau Ventilation Group, certifies that the Models SDB shown herein are licensed to bear the AMCA Seal. The ratings shown are based on test and procedures performed in accordance with AMCA Publication 211 and AMCA Publication 311 and comply with the requirement of the AMCA Certified Ratings Program.

UL STANDARD 705

SDB - SIZE 20

Motor HP	RPM		Static Pressure in Inches w.g.											
			0	0.125	0.25	0.375	0.5	0.625	0.75	0.875	1	1.25	1.5	1.75
1/4	500	CFM	2503	2136	1728	-	-	-	-	-	-	-	-	-
		BHP	0.11	0.12	0.14	-	-	-	-	-	-	-	-	-
		Sones	4.8	4.5	4.2	-	-	-	-	-	-	-	-	-
1/4	550	CFM	2754	2418	2065	-	-	-	-	-	-	-	-	-
		BHP	0.14	0.16	0.18	-	-	-	-	-	-	-	-	-
		Sones	5.8	5.5	5.1	-	-	-	-	-	-	-	-	-
1/4	600	CFM	3004	2696	2377	2016	-	-	-	-	-	-	-	-
		BHP	0.18	0.21	0.22	0.23	-	-	-	-	-	-	-	-
		Sones	6.7	6.5	6.1	6.0	-	-	-	-	-	-	-	-
1/3	650	CFM	3254	2971	2685	2376	1802	-	-	-	-	-	-	-
		BHP	0.23	0.26	0.28	0.29	0.29	-	-	-	-	-	-	-
		Sones	7.7	7.5	7.1	6.8	7.0	-	-	-	-	-	-	-
1/2	700	CFM	3505	3244	2980	2693	2389	-	-	-	-	-	-	-
		BHP	0.29	0.32	0.34	0.36	0.37	-	-	-	-	-	-	-
		Sones	8.7	8.5	8.2	7.8	7.8	-	-	-	-	-	-	-
1/2	750	CFM	3755	3513	3264	3006	2739	2366	-	-	-	-	-	-
		BHP	0.36	0.39	0.41	0.44	0.45	0.46	-	-	-	-	-	-
		Sones	9.8	9.7	9.5	9.0	8.7	8.9	-	-	-	-	-	-
3/4	800	CFM	4006	3780	3544	3312	3059	2800	2305	-	-	-	-	-
		BHP	0.43	0.47	0.50	0.52	0.54	0.55	0.54	-	-	-	-	-
		Sones	11.0	11.0	10.9	10.4	9.9	9.8	10.0	-	-	-	-	-
3/4	850	CFM	4256	4044	3821	3607	3370	3139	2865	2020	-	-	-	-
		BHP	0.52	0.55	0.59	0.61	0.64	0.66	0.67	0.61	-	-	-	-
		Sones	12.3	12.3	12.3	11.8	11.2	10.8	10.9	11.1	-	-	-	-
1	900	CFM	4506	4307	4097	3893	3680	3454	3227	2921	-	-	-	-
		BHP	0.62	0.65	0.69	0.72	0.75	0.77	0.78	0.79	-	-	-	-
		Sones	13.4	13.4	13.4	13.0	12.6	12.0	11.8	12.0	-	-	-	-
1	950	CFM	4757	4568	4370	4174	3982	3766	3560	3337	3001	-	-	-
		BHP	0.72	0.76	0.80	0.84	0.86	0.89	0.91	0.93	0.93	-	-	-
		Sones	14.5	14.5	14.5	14.3	13.8	13.4	13.0	13.1	13.3	-	-	-
1-1/2	1000	CFM	5007	4828	4641	4452	4272	4076	3870	3676	3457	-	-	-
		BHP	0.84	0.89	0.93	0.97	1.00	1.03	1.05	1.07	1.08	-	-	-
		Sones	15.7	15.7	15.7	15.7	15.2	14.8	14.3	14.1	14.3	-	-	-
1-1/2	1050	CFM	5257	5088	4911	4729	4556	4379	4184	3995	3802	3257	-	-
		BHP	0.98	1.02	1.07	1.11	1.14	1.17	1.20	1.23	1.24	1.25	-	-
		Sones	16.9	17.0	17.0	17.0	16.6	16.2	15.8	15.4	15.4	15.7	-	-
1-1/2	1100	CFM	5508	5346	5178	5005	4837	4672	4493	4304	4130	3721	-	-
		BHP	1.12	1.17	1.22	1.26	1.30	1.33	1.36	1.39	1.42	1.44	-	-
		Sones	18.2	18.2	18.2	18.3	18.1	17.7	17.3	16.9	16.6	16.8	-	-
2	1150	CFM	5758	5603	5444	5279	5115	4958	4796	4618	4440	4083	3565	-
		BHP	1.28	1.33	1.38	1.43	1.47	1.51	1.54	1.57	1.60	1.64	1.64	-
		Sones	19.6	19.6	19.6	19.5	19.4	19.1	18.8	18.4	18.1	17.9	18.2	-
2	1200	CFM	6008	5860	5708	5551	5392	5241	5089	4926	4753	4425	4033	-
		BHP	1.46	1.51	1.56	1.61	1.66	1.70	1.73	1.76	1.80	1.85	1.87	-
		Sones	21.0	21.0	20.9	20.9	20.9	20.6	20.2	19.9	19.6	19.1	19.4	-
2	1250	CFM	6259	6117	5971	5821	5668	5520	5376	5227	5065	4744	4410	3924
		BHP	1.65	1.70	1.75	1.81	1.86	1.90	1.94	1.97	2.01	2.07	2.11	2.11
		Sones	22.4	22.4	22.4	22.4	22.4	22.2	21.8	21.5	21.2	20.5	20.5	20.8

Power Ratings (BHP) does not include drive losses.
Performance certified is for installation type A - free inlet, free outlet.
Performance ratings include the effects of birdscreen in the airstream.
The sound ratings shown are loudness values in fan sones @ 5' (1.5m) in a hemispherical free field calculated per AMCA Standard 301.
Values shown are for: Installation Type A: free inlet hemispherical sone levels.

S&P USA Ventilation Systems, LLC., Div. of Soler & Palau Ventilation Group, certifies that the Models SDB shown herein are licensed to bear the AMCA Seal. The ratings shown are based on test and procedures performed in accordance with AMCA Publication 211 and AMCA Publication 311 and comply with the requirement of the AMCA Certified Ratings Program.

UL STANDARD 705

SDBe - Size 20

Motor HP	RPM		Static Pressure (in. wg)											
			0.00	0.13	0.25	0.38	0.50	0.63	0.75	0.88	1.00	1.25	1.50	1.75
2HP 1800 RPM	500	CFM	2295	1848	1271	-	-	-	-	-	-	-	-	-
		BHP	0.12	0.13	0.13	-	-	-	-	-	-	-	-	-
		SONES	9.9	5.9	5.0	-	-	-	-	-	-	-	-	-
	550	CFM	2524	2136	1655	-	-	-	-	-	-	-	-	-
		BHP	0.16	0.18	0.18	-	-	-	-	-	-	-	-	-
		SONES	11.1	7.3	6.2	-	-	-	-	-	-	-	-	-
	600	CFM	2754	2404	1975	1446	-	-	-	-	-	-	-	-
		BHP	0.21	0.23	0.23	0.23	-	-	-	-	-	-	-	-
		SONES	12.4	8.8	7.7	6.9	-	-	-	-	-	-	-	-
	650	CFM	2983	2664	2271	1861	-	-	-	-	-	-	-	-
		BHP	0.26	0.28	0.29	0.29	-	-	-	-	-	-	-	-
		SONES	13.7	10.5	9.2	8.2	-	-	-	-	-	-	-	-
	700	CFM	3213	2919	2571	2201	1735	-	-	-	-	-	-	-
		BHP	0.33	0.35	0.37	0.37	0.36	-	-	-	-	-	-	-
		SONES	15.1	12.1	10.6	9.6	9.0	-	-	-	-	-	-	-
	750	CFM	3442	3170	2865	2510	2144	1626	-	-	-	-	-	-
		BHP	0.40	0.43	0.45	0.45	0.45	0.43	-	-	-	-	-	-
		SONES	16.3	13.7	12.0	11.0	10.3	9.8	-	-	-	-	-	-
	800	CFM	3672	3418	3141	2805	2488	2092	-	-	-	-	-	-
		BHP	0.49	0.52	0.54	0.54	0.55	0.54	-	-	-	-	-	-
		SONES	17.7	15.3	13.3	12.6	11.8	11.3	-	-	-	-	-	-
	850	CFM	3901	3663	3408	3105	2801	2481	2058	-	-	-	-	-
		BHP	0.58	0.62	0.64	0.65	0.66	0.66	0.64	-	-	-	-	-
		SONES	19.1	16.9	14.9	14.0	13.5	12.9	12.3	-	-	-	-	-
	900	CFM	4131	3907	3668	3402	3099	2818	2485	2050	-	-	-	-
		BHP	0.69	0.73	0.76	0.78	0.78	0.78	0.78	0.75	-	-	-	-
		SONES	20.5	18.4	16.6	15.7	15.0	14.5	14.0	13.4	-	-	-	-
	950	CFM	4360	4149	3925	3685	3394	3133	2849	2505	2067	-	-	-
		BHP	0.82	0.85	0.88	0.91	0.91	0.92	0.92	0.91	0.88	-	-	-
		SONES	21.9	20.0	18.4	17.4	16.8	16.2	15.5	15.1	14.6	-	-	-
	1000	CFM	4590	4389	4179	3956	3696	3428	3177	2894	2543	-	-	-
		BHP	0.95	0.99	1.03	1.06	1.07	1.06	1.07	1.07	1.06	-	-	-
		SONES	23.4	21.6	20.0	19.1	18.5	18.0	17.4	16.8	16.2	-	-	-
	1050	CFM	4819	4629	4430	4221	3990	3722	3485	3237	2952	-	-	-
		BHP	1.10	1.14	1.18	1.21	1.23	1.23	1.24	1.24	1.24	-	-	-
		SONES	24.8	23.2	21.7	20.8	20.2	19.7	19.1	18.6	18.1	-	-	-
	1100	CFM	5049	4867	4679	4481	4271	4024	3782	3557	3310	2682	-	-
		BHP	1.27	1.31	1.35	1.38	1.42	1.42	1.42	1.43	1.43	1.40	-	-
		SONES	26.2	24.8	23.4	22.6	22.1	21.5	21.0	20.4	19.9	19.0	-	-
	1150	CFM	5278	5105	4925	4738	4542	4322	4076	3859	3638	3113	-	-
		BHP	1.45	1.49	1.53	1.57	1.61	1.62	1.61	1.62	1.63	1.62	-	-
		SONES	27.7	26.3	25.0	24.3	23.8	23.3	22.8	22.3	21.8	20.8	-	-
	1200	CFM	5508	5342	5171	4993	4809	4611	4378	4155	3949	3494	2891	-
		BHP	1.64	1.69	1.73	1.78	1.81	1.84	1.84	1.84	1.85	1.85	1.81	-
		SONES	29.3	27.9	26.7	26.1	25.7	25.2	24.7	24.2	23.6	22.7	21.7	-
	1250	CFM	5737	5578	5414	5245	5070	4886	4677	4449	4248	3836	3331	-
		BHP	1.86	1.91	1.95	2.00	2.04	2.07	2.08	2.07	2.08	2.10	2.08	-
		SONES	31.0	29.6	28.6	27.9	27.5	27.1	26.7	26.1	25.6	24.6	23.7	-
	1300	CFM	5967	5814	5657	5495	5328	5155	4968	4752	4543	4158	3721	3159
		BHP	2.09	2.14	2.19	2.24	2.28	2.32	2.34	2.34	2.33	2.35	2.35	2.30
		SONES	32.6	31.4	30.6	29.8	29.5	29.1	28.7	28.2	27.6	26.6	25.6	24.7

Power Ratings (BHP) does not include drive losses.
Performance certified is for installation type A - free inlet, free outlet.
Performance ratings include the effects of birdscreen in the airstream.
The sound ratings shown are loudness values in fan sones @ 5' (1.5m) in a hemispherical free field calculated per AMCA Standard 301.
Values shown are for: Installation Type A: free inlet hemispherical sone levels.

S&P USA Ventilation Systems, LLC., Div. of Soler & Palau Ventilation Group, certifies that the Models SDB shown herein are licensed to bear the AMCA Seal. The ratings shown are based on test and procedures performed in accordance with AMCA Publication 211 and AMCA Publication 311 and comply with the requirement of the AMCA Certified Ratings Program.

UL STANDARD 705

SDB - SIZE 22

Motor HP	RPM		Static Pressure in Inches w.g.								
			0	0.125	0.25	0.375	0.5	0.625	0.75	0.875	1
1/4	400	CFM	3239	2522	-	-	-	-	-	-	-
		BHP	0.12	0.13	-	-	-	-	-	-	-
		Sones	6.2	5.4	-	-	-	-	-	-	-
1/4	450	CFM	3644	3024	-	-	-	-	-	-	-
		BHP	0.17	0.19	-	-	-	-	-	-	-
		Sones	7.4	6.8	-	-	-	-	-	-	-
1/4	500	CFM	4049	3507	2824	-	-	-	-	-	-
		BHP	0.24	0.25	0.26	-	-	-	-	-	-
		Sones	8.8	8.1	7.2	-	-	-	-	-	-
1/3	550	CFM	4454	3975	3399	-	-	-	-	-	-
		BHP	0.32	0.33	0.34	-	-	-	-	-	-
		Sones	10.1	9.5	8.8	-	-	-	-	-	-
1/2	600	CFM	4859	4424	3918	3304	-	-	-	-	-
		BHP	0.41	0.43	0.45	0.44	-	-	-	-	-
		Sones	11.4	10.9	10.3	9.2	-	-	-	-	-
3/4	650	CFM	5264	4863	4409	3901	2989	-	-	-	-
		BHP	0.53	0.55	0.56	0.57	0.53	-	-	-	-
		Sones	13.0	12.3	11.6	11.2	10.1	-	-	-	-
3/4	700	CFM	5669	5296	4892	4443	3909	-	-	-	-
		BHP	0.66	0.68	0.70	0.71	0.70	-	-	-	-
		Sones	14.5	13.9	13.3	12.7	12.0	-	-	-	-
1	750	CFM	6073	5725	5364	4949	4498	3871	-	-	-
		BHP	0.81	0.83	0.85	0.87	0.87	0.85	-	-	-
		Sones	16.1	15.4	14.9	14.4	13.9	13.2	-	-	-
1-1/2	800	CFM	6478	6151	5822	5438	5043	4570	3777	-	-
		BHP	0.98	1.01	1.03	1.05	1.06	1.05	1.00	-	-
		Sones	17.8	17.1	16.5	16.0	15.7	15.2	14.6	-	-
1-1/2	850	CFM	6883	6575	6269	5922	5555	5159	4693	3576	-
		BHP	1.18	1.20	1.23	1.25	1.27	1.27	1.26	1.14	-
		Sones	19.4	18.8	18.3	17.9	17.6	17.3	16.7	16.1	-
1-1/2	900	CFM	7288	6997	6709	6396	6048	5697	5291	4803	-
		BHP	1.40	1.43	1.45	1.47	1.50	1.50	1.50	1.48	-
		Sones	21.2	20.6	20.1	19.7	19.4	19.1	18.8	18.3	-
2	950	CFM	7693	7417	7145	6860	6535	6208	5859	5445	4922
		BHP	1.64	1.67	1.70	1.72	1.75	1.77	1.77	1.76	1.73
		Sones	23.2	22.6	22.1	21.6	21.3	21.0	20.7	20.4	19.8
2	1000	CFM	8098	7836	7576	7313	7015	6701	6387	6039	5648
		BHP	1.92	1.95	1.98	2.00	2.03	2.06	2.06	2.06	2.05
		Sones	25.2	24.6	24.1	23.6	23.3	23.0	22.7	22.5	22.1

Power Ratings (BHP) does not include drive losses.
Performance certified is for installation type A - free inlet, free outlet.
Performance ratings include the effects of birdscreen in the airstream.
The sound ratings shown are loudness values in fan sones @ 5' (1.5m) in a hemispherical free field calculated per AMCA Standard 301. Values shown are for: Installation Type A: free inlet hemispherical sone levels.

S&P USA Ventilation Systems, LLC., Div. of Soler & Palau Ventilation Group, certifies that the Models SDB shown herein are licensed to bear the AMCA Seal. The ratings shown are based on test and procedures performed in accordance with AMCA Publication 211 and AMCA Publication 311 and comply with the requirement of the AMCA Certified Ratings Program.

UL STANDARD 705

SDB - SIZE 24

Motor HP	RPM		Static Pressure in Inches w.g.								
			0	0.125	0.25	0.375	0.5	0.625	0.75	0.875	1
1/4	400	CFM	4128	3407	2503	-	-	-	-	-	-
		BHP	0.17	0.19	0.19	-	-	-	-	-	-
		Sones	6.0	5.1	4.6	-	-	-	-	-	-
1/3	450	CFM	4643	4010	3264	-	-	-	-	-	-
		BHP	0.24	0.27	0.28	-	-	-	-	-	-
		Sones	7.3	6.3	5.8	-	-	-	-	-	-
1/2	500	CFM	5159	4588	3969	3350	-	-	-	-	-
		BHP	0.33	0.36	0.38	0.38	-	-	-	-	-
		Sones	8.9	8.0	7.4	6.9	-	-	-	-	-
1/2	550	CFM	5675	5151	4621	3979	-	-	-	-	-
		BHP	0.43	0.47	0.50	0.51	-	-	-	-	-
		Sones	11.0	9.9	9.3	8.8	-	-	-	-	-
3/4	600	CFM	6191	5704	5239	4697	4003	-	-	-	-
		BHP	0.56	0.60	0.64	0.66	0.66	-	-	-	-
		Sones	13.3	12.2	11.5	11.0	10.6	-	-	-	-
1	650	CFM	6707	6252	5831	5356	4822	-	-	-	-
		BHP	0.72	0.76	0.80	0.83	0.84	-	-	-	-
		Sones	15.7	14.6	13.9	13.4	12.9	-	-	-	-
1	700	CFM	7223	6796	6407	5990	5519	4977	-	-	-
		BHP	0.89	0.94	0.99	1.03	1.04	1.05	-	-	-
		Sones	17.9	16.8	15.9	15.4	15.0	14.7	-	-	-
1-1/2	750	CFM	7739	7336	6973	6598	6177	5726	5171	-	-
		BHP	1.10	1.15	1.20	1.25	1.27	1.29	1.29	-	-
		Sones	19.6	18.5	17.6	17.1	16.7	16.3	16.0	-	-
1-1/2	800	CFM	8255	7875	7531	7187	6814	6400	5964	-	-
		BHP	1.33	1.39	1.45	1.50	1.53	1.55	1.57	-	-
		Sones	21.4	20.3	19.4	18.9	18.5	18.1	17.7	-	-
2	850	CFM	8771	8412	8084	7764	7427	7055	6662	6231	-
		BHP	1.60	1.66	1.72	1.78	1.82	1.85	1.87	1.88	-
		Sones	23.1	22.2	21.3	20.6	20.2	19.9	19.5	19.2	-
2	900	CFM	9287	8946	8632	8332	8021	7688	7323	6950	6527
		BHP	1.90	1.96	2.02	2.09	2.14	2.18	2.21	2.22	2.23
		Sones	25.0	24.1	23.2	22.5	22.1	21.7	21.3	20.9	20.7

Power Ratings (BHP) does not include drive losses.
Performance certified is for installation type A - free inlet, free outlet.
Performance ratings include the effects of birdscreen in the airstream.
The sound ratings shown are loudness values in fan sones @ 5' (1.5m) in a hemispherical free field calculated per AMCA Standard 301. Values shown are for: Installation Type A: free inlet hemispherical sone levels.

S&P USA Ventilation Systems, LLC., Div. of Soler & Palau Ventilation Group, certifies that the Models SDB shown herein are licensed to bear the AMCA Seal. The ratings shown are based on test and procedures performed in accordance with AMCA Publication 211 and AMCA Publication 311 and comply with the requirement of the AMCA Certified Ratings Program.

UL STANDARD 705

SDBe - Size 24(Part 1 of 2)

Motor HP		RPM		Static Pressure (in. wg)								
				0.00	0.13	0.25	0.38	0.50	0.63	0.75	0.88	1.00
2HP 1800 RPM		300	CFM	2928	1903	-	-	-	-	-	-	-
			BHP	0.08	0.10	-	-	-	-	-	-	-
			SONES	3.1	2.6	-	-	-	-	-	-	-
		350	CFM	3416	2614	-	-	-	-	-	-	-
			BHP	0.13	0.15	-	-	-	-	-	-	-
			SONES	4.3	3.7	-	-	-	-	-	-	-
		375	CFM	3660	2934	1446	-	-	-	-	-	-
			BHP	0.16	0.18	0.15	-	-	-	-	-	-
			SONES	4.9	4.5	4.0	-	-	-	-	-	-
		400	CFM	3904	3243	2256	-	-	-	-	-	-
			BHP	0.19	0.22	0.22	-	-	-	-	-	-
			SONES	5.6	5.1	4.5	-	-	-	-	-	-
		450	CFM	4392	3828	3089	-	-	-	-	-	-
			BHP	0.28	0.31	0.32	-	-	-	-	-	-
			SONES	7.0	6.6	5.8	-	-	-	-	-	-
		475	CFM	4636	4110	3434	2421	-	-	-	-	-
			BHP	0.33	0.36	0.38	0.36	-	-	-	-	-
			SONES	7.7	7.4	6.6	6.1	-	-	-	-	-
		500	CFM	4880	4388	3761	2956	-	-	-	-	-
			BHP	0.38	0.42	0.44	0.44	-	-	-	-	-
			SONES	8.5	8.3	7.4	6.8	-	-	-	-	-
		550	CFM	5368	4936	4395	3767	2836	-	-	-	-
			BHP	0.50	0.55	0.58	0.59	0.56	-	-	-	-
			SONES	10.1	10.0	9.2	8.4	7.8	-	-	-	-
		575	CFM	5612	5204	4699	4115	3369	-	-	-	-
			BHP	0.58	0.62	0.66	0.67	0.66	-	-	-	-
			SONES	11.1	11.0	10.2	9.4	8.7	-	-	-	-
		600	CFM	5856	5470	4994	4446	3806	2681	-	-	-
			BHP	0.66	0.70	0.74	0.76	0.76	0.68	-	-	-
			SONES	11.9	11.9	11.3	10.3	9.6	9.0	-	-	-
	5HP 1800 RPM	650	CFM	6345	5995	5568	5089	4561	3897	2542	-	-
			BHP	0.83	0.88	0.93	0.96	0.98	0.96	0.80	-	-
			SONES	13.9	13.9	13.5	12.6	11.7	11.0	10.3	-	-
		675	CFM	6589	6255	5849	5400	4900	4323	3510	-	-
			BHP	0.93	0.98	1.03	1.07	1.09	1.09	1.03	-	-
			SONES	14.8	14.9	14.7	13.7	12.8	12.1	11.4	-	-
		700	CFM	6833	6513	6127	5704	5228	4714	4047	2618	-
			BHP	1.04	1.09	1.15	1.18	1.21	1.22	1.19	0.98	-
			SONES	15.8	15.8	15.8	14.9	14.0	13.2	12.5	11.8	-
		750	CFM	7321	7026	6678	6292	5869	5416	4906	4253	2893
			BHP	1.28	1.34	1.39	1.44	1.48	1.50	1.49	1.45	1.23
			SONES	17.7	17.8	18.0	17.1	16.3	15.6	14.8	14.2	13.5
		775	CFM	7565	7281	6950	6580	6180	5746	5286	4716	3935
			BHP	1.41	1.47	1.53	1.58	1.62	1.65	1.65	1.63	1.55
			SONES	18.5	18.7	18.8	18.2	17.2	16.5	15.8	15.2	14.5

Power Ratings (BHP) does not include drive losses.
Performance certified is for installation type A - free inlet, free outlet.
Performance ratings include the effects of birdscreen in the airstream.
The sound ratings shown are loudness values in fan sones @ 5' (1.5m) in a hemispherical free field calculated per AMCA Standard 301. Values shown are for: Installation Type A: free inlet hemispherical sone levels.

S&P USA Ventilation Systems, LLC., Div. of Soler & Palau Ventilation Group, certifies that the Models SDB shown herein are licensed to bear the AMCA Seal. The ratings shown are based on test and procedures performed in accordance with AMCA Publication 211 and AMCA Publication 311 and comply with the requirement of the AMCA Certified Ratings Program.

UL STANDARD 705

SDBe - Size 24(Part 2 of 2)

Motor HP		RPM		Static Pressure (in. wg)								
				0.00	0.13	0.25	0.38	0.50	0.63	0.75	0.88	1.00
2HP 1800 RPM	5HP 1800 RPM	800	CFM	7809	7534	7219	6864	6486	6070	5640	5138	4511
			BHP	1.55	1.61	1.67	1.73	1.77	1.80	1.82	1.81	1.76
			SONES	19.3	19.5	19.6	19.2	18.3	17.4	16.7	16.1	15.5
		850	CFM	8297	8040	7751	7423	7079	6705	6307	5896	5407
			BHP	1.86	1.93	1.99	2.05	2.10	2.14	2.17	2.18	2.17
			SONES	21.0	21.0	21.2	21.1	20.2	19.4	18.7	18.1	17.6
		875	CFM	8541	8293	8015	7700	7370	7015	6631	6241	5805
			BHP	2.03	2.10	2.16	2.23	2.28	2.33	2.36	2.38	2.38
			SONES	21.9	22.0	22.1	22.1	21.2	20.5	19.7	19.1	18.6
		950	CFM	9338	9083	8821	8554	8265	7944	7620	7285	6911
			BHP	2.42	2.49	2.55	2.62	2.67	2.73	2.77	2.80	2.82
			SONES	26.3	25.9	25.5	24.7	24.4	24.1	23.9	23.6	23.3
		975	CFM	9583	9335	9081	8822	8547	8239	7920	7601	7253
			BHP	2.62	2.69	2.75	2.82	2.88	2.94	2.98	3.02	3.04
			SONES	27.7	27.3	26.9	26.0	25.6	25.3	25.1	24.8	24.6
		1025	CFM	10075	9839	9598	9353	9099	8818	8516	8308	7908
			BHP	3.04	3.12	3.19	3.25	3.32	3.38	3.44	3.47	3.51
			SONES	30.6	30.1	29.7	29.0	28.3	28.0	27.8	27.5	27.2
		1050	CFM	10321	10090	9855	9617	9371	9103	8813	8518	8221
			BHP	3.27	3.35	3.42	3.49	3.55	3.62	3.68	3.73	3.76
			SONES	32.0	31.6	31.2	30.5	29.7	29.5	29.2	28.9	28.7
		1075	CFM	10566	10342	10112	9880	9641	9386	9106	8816	8530
			BHP	3.51	3.59	3.66	3.73	3.80	3.87	3.93	3.98	4.03
			SONES	33.6	33.1	32.7	32.0	31.2	30.9	30.6	30.4	30.1
		1125	CFM	11058	10843	10625	10403	10178	9943	9685	9411	9135
			BHP	4.02	4.10	4.18	4.26	4.33	4.40	4.47	4.53	4.58
			SONES	36.8	36.4	35.9	35.4	34.5	34.0	33.7	33.5	33.2

Power Ratings (BHP) does not include drive losses.
Performance certified is for installation type A - free inlet, free outlet.
Performance ratings include the effects of birdscreen in the airstream.
The sound ratings shown are loudness values in fan sones @ 5' (1.5m) in a hemispherical free field calculated per AMCA Standard 301. Values shown are for: Installation Type A: free inlet hemispherical sone levels.

S&P USA Ventilation Systems, LLC., Div. of Soler & Palau Ventilation Group, certifies that the Models SDB shown herein are licensed to bear the AMCA Seal. The ratings shown are based on test and procedures performed in accordance with AMCA Publication 211 and AMCA Publication 311 and comply with the requirement of the AMCA Certified Ratings Program.

UL STANDARD 705

SDB - SIZE 27

Motor HP	RPM		Static Pressure in Inches w.g.								
			0	0.125	0.25	0.375	0.5	0.625	0.75	0.875	1
1/4	350	CFM	5085	4081	-	-	-	-	-	-	-
		BHP	0.22	0.24	-	-	-	-	-	-	-
		Sones	5.6	5.0	-	-	-	-	-	-	-
1/3	400	CFM	5811	4962	3856	-	-	-	-	-	-
		BHP	0.33	0.35	0.35	-	-	-	-	-	-
		Sones	7.0	6.5	6.1	-	-	-	-	-	-
1/2	450	CFM	6538	5795	4909	-	-	-	-	-	-
		BHP	0.47	0.49	0.51	-	-	-	-	-	-
		Sones	8.5	8.0	7.6	-	-	-	-	-	-
3/4	500	CFM	7264	6604	5863	-	-	-	-	-	-
		BHP	0.64	0.67	0.69	-	-	-	-	-	-
		Sones	10.1	9.8	9.4	-	-	-	-	-	-
1	550	CFM	7990	7395	6749	5990	-	-	-	-	-
		BHP	0.85	0.89	0.92	0.93	-	-	-	-	-
		Sones	12.0	11.9	11.5	11.1	-	-	-	-	-
1-1/2	600	CFM	8717	8175	7595	6953	6190	-	-	-	-
		BHP	1.11	1.15	1.18	1.20	1.20	-	-	-	-
		Sones	14.1	14.0	13.7	13.3	13.0	-	-	-	-
1-1/2	650	CFM	9443	8945	8418	7854	7213	-	-	-	-
		BHP	1.41	1.46	1.49	1.52	1.53	-	-	-	-
		Sones	16.2	16.1	16.0	15.6	15.3	-	-	-	-
2	700	CFM	10169	9709	9225	8717	8161	7530	-	-	-
		BHP	1.76	1.81	1.85	1.88	1.91	1.91	-	-	-
		Sones	18.2	18.1	18.0	17.7	17.4	17.2	-	-	-

Power Ratings (BHP) does not include drive losses.
Performance certified is for installation type A - free inlet, free outlet.
Performance ratings include the effects of birdscreen in the airstream.
The sound ratings shown are loudness values in fan sones @ 5' (1.5m) in a hemispherical free field calculated per AMCA Standard 301. Values shown are for: Installation Type A: free inlet hemispherical sone levels.

S&P USA Ventilation Systems, LLC., Div. of Soler & Palau Ventilation Group, certifies that the Models SDB shown herein are licensed to bear the AMCA Seal. The ratings shown are based on test and procedures performed in accordance with AMCA Publication 211 and AMCA Publication 311 and comply with the requirement of the AMCA Certified Ratings Program.

UL STANDARD 705

SDB - SIZE 30

Motor HP	RPM		Static Pressure in Inches w.g.									
			0	0.125	0.25	0.375	0.5	0.625	0.75	0.875	1	1.25
1/2	300	CFM	5570	4426	-	-	-	-	-	-	-	-
		BHP	0.19	0.22	-	-	-	-	-	-	-	-
		Sones	7.9	5.7	-	-	-	-	-	-	-	-
1/2	350	CFM	6499	5522	4336	-	-	-	-	-	-	-
		BHP	0.31	0.34	0.35	-	-	-	-	-	-	-
		Sones	9.5	7.8	6.6	-	-	-	-	-	-	-
1/2	400	CFM	7427	6551	5696	-	-	-	-	-	-	-
		BHP	0.46	0.50	0.53	-	-	-	-	-	-	-
		Sones	11.3	10.0	8.7	-	-	-	-	-	-	-
3/4	450	CFM	8355	7562	6841	5975	-	-	-	-	-	-
		BHP	0.65	0.70	0.74	0.76	-	-	-	-	-	-
		Sones	13.6	12.2	11.0	10.4	-	-	-	-	-	-
1	500	CFM	9284	8563	7915	7209	-	-	-	-	-	-
		BHP	0.90	0.95	1.00	1.04	-	-	-	-	-	-
		Sones	16.8	15.3	13.9	12.9	-	-	-	-	-	-
1-1/2	550	CFM	10212	9553	8946	8353	7684	-	-	-	-	-
		BHP	1.19	1.26	1.31	1.36	1.39	-	-	-	-	-
		Sones	20.4	18.8	17.3	15.8	15.0	-	-	-	-	-
2	600	CFM	11140	10534	9958	9434	8853	8221	-	-	-	-
		BHP	1.55	1.62	1.68	1.74	1.79	1.81	-	-	-	-
		Sones	24.5	22.7	21.3	19.5	18.0	17.3	-	-	-	-
2	650	CFM	12069	11507	10968	10473	9975	9413	8817	-	-	-
		BHP	1.97	2.04	2.12	2.18	2.23	2.29	2.30	-	-	-
		Sones	26.9	25.3	23.9	22.4	21.0	19.9	19.3	-	-	-
3	700	CFM	12997	12474	11968	11492	11045	10560	10032	9469	-	-
		BHP	2.46	2.54	2.62	2.69	2.75	2.81	2.86	2.87	-	-
		Sones	29.2	27.8	26.5	25.3	24.0	22.8	22.2	21.7	-	-
5	750	CFM	13926	13436	12961	12503	12082	11658	11189	10695	10167	-
		BHP	3.03	3.11	3.20	3.28	3.35	3.41	3.48	3.52	3.53	-
		Sones	31.6	30.4	29.2	28.1	26.9	25.9	25.0	24.6	24.1	-
5	800	CFM	14854	14394	13946	13511	13102	12711	12302	11855	11392	-
		BHP	3.67	3.77	3.86	3.95	4.02	4.09	4.16	4.23	4.27	-
		Sones	34.0	33.0	32.0	31.0	30.0	29.0	28.1	27.6	27.1	-
5	850	CFM	15782	15349	14926	14512	14113	13743	13373	12978	12554	11663
		BHP	4.40	4.50	4.60	4.70	4.79	4.86	4.94	5.01	5.08	5.14
		Sones	36.6	35.7	34.8	33.9	33.0	32.1	31.2	30.6	30.2	29.4

Power Ratings (BHP) does not include drive losses.
Performance certified is for installation type A - free inlet, free outlet.
Performance ratings include the effects of birdscreen in the airstream.
The sound ratings shown are loudness values in fan sones @ 5' (1.5m) in a hemispherical free field calculated per AMCA Standard 301. Values shown are for: Installation Type A: free inlet hemispherical sone levels.

S&P USA Ventilation Systems, LLC., Div. of Soler & Palau Ventilation Group, certifies that the Models SDB shown herein are licensed to bear the AMCA Seal. The ratings shown are based on test and procedures performed in accordance with AMCA Publication 211 and AMCA Publication 311 and comply with the requirement of the AMCA Certified Ratings Program.

UL STANDARD 705

SDBe - Size 30

Motor HP		RPM		Static Pressure (in. wg)									
				0.00	0.13	0.25	0.38	0.50	0.63	0.75	0.88	1.00	1.25
5HP 1800 RPM		300	CFM	5264	4197	-	-	-	-	-	-	-	-
			BHP	0.21	0.24	-	-	-	-	-	-	-	-
			SONES	5.1	4.3	-	-	-	-	-	-	-	-
		350	CFM	6142	5271	4093	-	-	-	-	-	-	-
			BHP	0.33	0.37	0.38	-	-	-	-	-	-	-
			SONES	6.9	6.0	5.5	-	-	-	-	-	-	-
		400	CFM	7019	6288	5387	4183	-	-	-	-	-	-
			BHP	0.49	0.55	0.57	0.55	-	-	-	-	-	-
			SONES	8.6	7.8	7.3	6.7	-	-	-	-	-	-
		450	CFM	7896	7247	6496	5614	4458	-	-	-	-	-
			BHP	0.70	0.77	0.81	0.81	0.77	-	-	-	-	-
			SONES	10.4	9.6	9.1	8.5	8.0	-	-	-	-	-
		500	CFM	8774	8186	7560	6830	5935	4880	-	-	-	-
			BHP	0.96	1.04	1.09	1.11	1.10	1.05	-	-	-	-
			SONES	12.6	11.8	11.1	10.5	9.9	9.5	-	-	-	-
		550	CFM	9651	9112	8582	7931	7246	6371	5422	-	-	-
			BHP	1.28	1.37	1.43	1.47	1.49	1.46	1.41	-	-	-
			SONES	14.9	14.2	13.6	13.0	12.3	11.5	11.0	-	-	-
		600	CFM	10529	10031	9556	8999	8394	7736	6909	6049	-	-
			BHP	1.66	1.76	1.84	1.89	1.92	1.93	1.89	1.84	-	-
			SONES	17.2	16.7	16.2	15.6	15.0	14.3	13.5	12.8	-	-
	7.5HP 1800 RPM	650	CFM	11406	10945	10506	10035	9485	8920	8291	7516	6733	-
			BHP	2.11	2.22	2.31	2.38	2.42	2.45	2.45	2.41	2.35	-
			SONES	19.6	19.2	18.7	18.2	17.7	17.1	16.4	15.7	14.9	-
		700	CFM	12283	11855	11444	11031	10542	10031	9498	8902	8185	6641
			BHP	2.63	2.76	2.86	2.93	3.00	3.04	3.06	3.06	3.01	2.87
			SONES	22.1	21.6	21.3	20.9	20.3	19.8	19.3	18.5	17.9	16.6
		750	CFM	13161	12760	12372	11994	11576	11094	10614	10117	9560	8217
			BHP	3.23	3.37	3.48	3.57	3.65	3.71	3.75	3.76	3.77	3.66
			SONES	24.7	24.3	23.9	23.5	23.1	22.6	22.1	21.5	20.8	19.5
		800	CFM	14038	13662	13294	12941	12577	12150	11690	11243	10774	9655
			BHP	3.93	4.07	4.20	4.30	4.39	4.46	4.52	4.55	4.57	4.53
			SONES	27.3	26.7	26.3	26.0	25.7	25.2	24.7	24.3	23.7	22.4
		850	CFM	14915	14561	14212	13879	13543	13176	12758	12326	11905	10977
			BHP	4.71	4.87	5.00	5.12	5.22	5.30	5.38	5.43	5.46	5.48
			SONES	29.9	29.4	28.9	28.6	28.2	27.8	27.4	27.0	26.6	25.4
		900	CFM	15761	15432	15102	14772	14443	14105	13749	13376	12988	12153
			BHP	5.56	5.69	5.80	5.91	6.00	6.09	6.17	6.24	6.29	6.35
			SONES	35.5	35.4	35.3	35.1	34.9	34.2	33.6	32.9	32.3	31.0
		950	CFM	16636	16324	16012	15699	15390	15073	14746	14403	14046	13292
			BHP	6.54	6.67	6.80	6.91	7.01	7.11	7.20	7.28	7.35	7.45
			SONES	38.2	38.1	38.0	37.9	37.8	37.3	36.6	36.0	35.3	34.2
		1000	CFM	17512	17216	16919	16622	16327	16029	15726	15409	15080	14387
			BHP	7.63	7.77	7.90	8.02	8.14	8.24	8.34	8.43	8.51	8.64
			SONES	40.8	40.7	40.7	40.6	40.5	40.3	39.7	39.1	38.6	37.5
		1050	CFM	18388	18105	17823	17539	17258	16976	16691	16398	16093	15450
			BHP	8.83	8.98	9.12	9.25	9.37	9.48	9.59	9.69	9.78	9.94
			SONES	43.7	43.7	43.6	43.5	43.4	43.3	42.8	42.3	41.7	40.7
		1100	CFM	19263	18994	18724	18454	18184	17916	17646	17371	17087	16490
			BHP	10.15	10.31	10.46	10.60	10.73	10.85	10.96	11.07	11.17	11.36
			SONES	47.5	47.4	47.2	47.1	47.0	46.8	46.6	46.0	45.4	44.3

Power Ratings (BHP) does not include drive losses.
Performance certified is for installation type A - free inlet, free outlet.
Performance ratings include the effects of birdscreen in the airstream.
The sound ratings shown are loudness values in fan sones @ 5' (1.5m) in a hemispherical free field calculated per AMCA Standard 301. Values shown are for: Installation Type A: free inlet hemispherical sone levels.

S&P USA Ventilation Systems, LLC., Div. of Soler & Palau Ventilation Group, certifies that the Models SDB shown herein are licensed to bear the AMCA Seal. The ratings shown are based on test and procedures performed in accordance with AMCA Publication 211 and AMCA Publication 311 and comply with the requirement of the AMCA Certified Ratings Program.

UL STANDARD 705

SDB - SIZE 33

Motor HP	RPM		Static Pressure in Inches w.g.										
			0	0.125	0.25	0.375	0.5	0.625	0.75	0.875	1	1.25	1.5
1/2	250	CFM	5722	4025	-	-	-	-	-	-	-	-	-
		BHP	0.18	0.19	-	-	-	-	-	-	-	-	-
		SONES	5.7	3.9	-	-	-	-	-	-	-	-	-
1/2	300	CFM	6866	5611	-	-	-	-	-	-	-	-	-
		BHP	0.32	0.34	-	-	-	-	-	-	-	-	-
		SONES	8.3	6.2	-	-	-	-	-	-	-	-	-
1/2	350	CFM	8010	6951	5562	-	-	-	-	-	-	-	-
		BHP	0.50	0.53	0.53	-	-	-	-	-	-	-	-
		SONES	10.4	8.5	7.7	-	-	-	-	-	-	-	-
3/4	400	CFM	9155	8218	7231	5882	-	-	-	-	-	-	-
		BHP	0.75	0.78	0.80	0.77	-	-	-	-	-	-	-
		SONES	12.5	11.0	10.2	9.4	-	-	-	-	-	-	-
1	450	CFM	10299	9473	8646	7573	6275	-	-	-	-	-	-
		BHP	1.07	1.11	1.13	1.13	1.07	-	-	-	-	-	-
		SONES	15.5	13.9	13.1	12.3	11.6	-	-	-	-	-	-
1-1/2	500	CFM	11443	10704	9959	9155	8050	6846	-	-	-	-	-
		BHP	1.46	1.51	1.54	1.56	1.54	1.46	-	-	-	-	-
		SONES	18.7	16.9	16.1	15.3	14.6	14.1	-	-	-	-	-
2	550	CFM	12588	11918	11226	10558	9747	8667	7625	-	-	-	-
		BHP	1.95	2.00	2.04	2.07	2.08	2.04	1.96	-	-	-	-
		SONES	22.2	20.3	19.1	18.3	17.7	17.0	16.6	-	-	-	-
3	600	CFM	13732	13120	12488	11879	11223	10416	9400	8532	-	-	-
		BHP	2.53	2.59	2.63	2.67	2.70	2.70	2.64	2.56	-	-	-
		SONES	26.0	24.0	22.3	21.5	20.9	20.2	19.6	19.2	-	-	-
3	650	CFM	14876	14313	13734	13155	12592	11951	11170	10226	9485	6623	-
		BHP	3.21	3.28	3.33	3.38	3.41	3.44	3.43	3.36	3.29	2.92	-
		SONES	29.1	27.2	25.6	24.5	23.8	23.2	22.5	21.9	21.6	21.2	-
5	700	CFM	16021	15499	14964	14416	13902	13357	12738	11995	11123	9245	-
		BHP	4.01	4.08	4.14	4.20	4.24	4.27	4.29	4.28	4.21	3.97	-
		SONES	32.1	30.3	28.7	27.7	27.0	26.4	25.8	25.2	24.6	23.8	-
5	750	CFM	17165	16679	16182	15674	15176	14694	14169	13578	12879	11364	-
		BHP	4.94	5.01	5.08	5.14	5.19	5.23	5.26	5.28	5.26	5.11	-
		SONES	35.1	33.5	32.0	31.1	30.4	29.8	29.2	28.6	28.0	27.0	-

Power Ratings (BHP) does not include drive losses.
Performance certified is for installation type A - free inlet, free outlet.
Performance ratings include the effects of birdscreen in the airstream.
The sound ratings shown are loudness values in fan sones @ 5' (1.5m) in a hemispherical free field calculated per AMCA Standard 301. Values shown are for: Installation Type A: free inlet hemispherical sone levels.

S&P USA Ventilation Systems, LLC., Div. of Soler & Palau Ventilation Group, certifies that the Models SDB shown herein are licensed to bear the AMCA Seal. The ratings shown are based on test and procedures performed in accordance with AMCA Publication 211 and AMCA Publication 311 and comply with the requirement of the AMCA Certified Ratings Program.

UL STANDARD 705

SDB - SIZE 36

Motor HP	RPM		Static Pressure in Inches w.g.									
			0	0.125	0.25	0.375	0.5	0.625	0.75	0.875	1	1.25
3/4	300	CFM	9028	7949	6385	-	-	-	-	-	-	-
		BHP	0.47	0.52	0.53	-	-	-	-	-	-	-
		SONES	7.3	7.0	6.6	-	-	-	-	-	-	-
3/4	325	CFM	9780	8813	7487	-	-	-	-	-	-	-
		BHP	0.60	0.66	0.68	-	-	-	-	-	-	-
		SONES	8.3	8.0	7.7	-	-	-	-	-	-	-
3/4	350	CFM	10533	9657	8496	7389	-	-	-	-	-	-
		BHP	0.75	0.82	0.85	0.84	-	-	-	-	-	-
		SONES	9.3	9.0	8.7	8.3	-	-	-	-	-	-
1	375	CFM	11285	10486	9458	8176	-	-	-	-	-	-
		BHP	0.93	1.00	1.04	1.04	-	-	-	-	-	-
		SONES	10.4	10.1	9.9	9.5	-	-	-	-	-	-
1-1/2	400	CFM	12037	11301	10378	9250	8612	-	-	-	-	-
		BHP	1.12	1.20	1.25	1.27	1.26	-	-	-	-	-
		SONES	11.6	11.3	11.1	10.9	10.4	-	-	-	-	-
1-1/2	425	CFM	12790	12108	11267	10260	9066	8005	-	-	-	-
		BHP	1.35	1.43	1.49	1.52	1.51	1.47	-	-	-	-
		SONES	12.9	12.7	12.5	12.3	11.8	11.4	-	-	-	-
2	450	CFM	13542	12906	12134	11233	10188	9584	13629	-	-	-
		BHP	1.60	1.69	1.76	1.80	1.80	1.79	1.59	-	-	-
		SONES	14.2	14.0	13.8	13.7	13.4	12.9	12.1	-	-	-
2	475	CFM	14294	13699	12986	12168	11211	10128	10072	-	-	-
		BHP	1.88	1.97	2.05	2.10	2.12	2.10	2.10	-	-	-
		SONES	15.5	15.4	15.3	15.1	15.0	14.6	14.1	-	-	-
3	500	CFM	15047	14486	13825	13073	12213	11257	10283	8855	-	-
		BHP	2.19	2.29	2.38	2.44	2.47	2.47	2.44	2.34	-	-
		SONES	16.8	16.7	16.6	16.5	16.4	16.1	15.7	15.3	-	-
3	525	CFM	15799	15270	14654	13957	13175	12287	11316	11400	-	-
		BHP	2.54	2.64	2.73	2.81	2.85	2.86	2.85	2.85	-	-
		SONES	18.2	18.1	18.0	17.9	17.8	17.8	17.3	16.9	-	-
3	550	CFM	16551	16050	15473	14822	14106	13299	12429	11389	11753	-
		BHP	2.92	3.03	3.13	3.21	3.26	3.29	3.29	3.25	3.27	-
		SONES	19.6	19.5	19.4	19.3	19.2	19.2	18.9	18.5	18.1	-
5	575	CFM	17303	16827	16284	15676	15012	14274	13456	12588	11958	13464
		BHP	3.34	3.45	3.55	3.65	3.71	3.75	3.76	3.75	3.72	3.76
		SONES	20.9	20.9	20.8	20.7	20.7	20.6	20.6	20.2	19.7	18.2
5	600	CFM	18056	17602	17089	16519	15898	15219	14469	13675	12771	11111
		BHP	3.79	3.91	4.02	4.12	4.20	4.25	4.27	4.27	4.24	4.11
		SONES	22.4	22.3	22.3	22.2	22.2	22.2	22.1	21.9	21.5	20.7
5	625	CFM	18808	18374	17889	17352	16768	16139	15449	14692	13916	13594
		BHP	4.29	4.41	4.52	4.63	4.72	4.78	4.82	4.83	4.82	4.81
		SONES	23.8	23.7	23.6	23.6	23.5	23.5	23.5	23.5	23.1	22.3
5	650	CFM	19560	19145	18684	18177	17625	17038	16400	15705	14974	13231
		BHP	4.82	4.95	5.07	5.18	5.28	5.36	5.41	5.43	5.43	5.35
		SONES	25.1	24.9	24.8	24.8	24.7	24.7	24.7	24.7	24.5	23.8

Power Ratings (BHP) does not include drive losses.
Performance certified is for installation type A - free inlet, free outlet.
Performance ratings include the effects of birdscreen in the airstream.
The sound ratings shown are loudness values in fan sones @ 5' (1.5m) in a hemispherical free field calculated per AMCA Standard 301. Values shown are for: Installation Type A: free inlet hemispherical sone levels.

S&P USA Ventilation Systems, LLC., Div. of Soler & Palau Ventilation Group, certifies that the Models SDB shown herein are licensed to bear the AMCA Seal. The ratings shown are based on test and procedures performed in accordance with AMCA Publication 211 and AMCA Publication 311 and comply with the requirement of the AMCA Certified Ratings Program.

UL STANDARD 705

SDB - SIZE 42

Motor HP	RPM		Static Pressure in Inches w.g.										
			0	0.125	0.25	0.375	0.5	0.625	0.75	0.875	1	1.25	1.5
3/4	250	CFM	11126	9764	8256	-	-	-	-	-	-	-	-
		BHP	0.55	0.62	0.63	-	-	-	-	-	-	-	-
		SONES	7.0	6.6	6.3	-	-	-	-	-	-	-	-
3/4	275	CFM	12239	11046	9241	-	-	-	-	-	-	-	-
		BHP	0.74	0.81	0.85	-	-	-	-	-	-	-	-
		SONES	8.3	7.9	7.7	-	-	-	-	-	-	-	-
1	300	CFM	13352	12301	10816	10449	-	-	-	-	-	-	-
		BHP	0.96	1.04	1.10	1.10	-	-	-	-	-	-	-
		SONES	9.8	9.5	9.2	9.1	-	-	-	-	-	-	-
1-1/2	325	CFM	14464	13526	12265	10487	-	-	-	-	-	-	-
		BHP	1.21	1.31	1.38	1.39	-	-	-	-	-	-	-
		SONES	11.4	11.1	10.8	10.6	-	-	-	-	-	-	-
2	350	CFM	15577	14729	13621	12165	12003	-	-	-	-	-	-
		BHP	1.52	1.62	1.71	1.74	1.74	-	-	-	-	-	-
		SONES	12.8	12.5	12.2	11.9	11.7	-	-	-	-	-	-
2	375	CFM	16689	15915	14917	13700	12088	10571	-	-	-	-	-
		BHP	1.87	1.98	2.08	2.14	2.13	2.06	-	-	-	-	-
		SONES	14.3	14.0	13.6	13.4	13.2	13.0	-	-	-	-	-
3	400	CFM	17802	17090	16184	15131	13788	12371	-	-	-	-	-
		BHP	2.27	2.38	2.49	2.57	2.60	2.57	-	-	-	-	-
		SONES	15.9	15.5	15.3	15.0	14.7	14.6	-	-	-	-	-
3	425	CFM	18915	18255	17433	16488	15341	13933	14793	-	-	-	-
		BHP	2.72	2.84	2.96	3.06	3.12	3.11	3.12	-	-	-	-
		SONES	17.7	17.5	17.2	16.9	16.7	16.5	16.4	-	-	-	-
5	450	CFM	20027	19412	18661	17795	16804	15590	14091	14857	-	-	-
		BHP	3.22	3.35	3.49	3.60	3.68	3.71	3.66	3.70	-	-	-
		SONES	19.6	19.3	19.0	18.8	18.5	18.3	18.2	18.1	-	-	-
5	475	CFM	21140	20564	19872	19066	18193	17142	15917	14349	13693	-	-
		BHP	3.79	3.93	4.07	4.20	4.29	4.35	4.36	4.27	4.22	-	-
		SONES	21.7	21.4	21.1	20.9	20.6	20.4	20.2	20.1	19.9	-	-
5	500	CFM	22252	21711	21069	20329	19528	18610	17517	16279	16513	-	-
		BHP	4.42	4.57	4.71	4.85	4.97	5.05	5.09	5.06	5.07	-	-
		SONES	23.7	23.5	23.2	23.0	22.7	22.5	22.3	22.1	22.0	-	-
7-1/2	525	CFM	23365	22853	22256	21573	20824	20009	19058	17977	16692	11579	-
		BHP	5.12	5.27	5.43	5.58	5.70	5.80	5.87	5.89	5.84	4.94	-
		SONES	25.9	25.7	25.4	25.2	24.9	24.7	24.5	24.3	24.1	23.9	-
7-1/2	550	CFM	24478	23993	23434	22800	22091	21356	20516	19546	18482	19099	-
		BHP	5.89	6.05	6.21	6.37	6.51	6.63	6.71	6.76	6.76	6.77	-
		SONES	28.2	27.9	27.7	27.4	27.1	26.9	26.7	26.5	26.3	26.1	-
7-1/2	575	CFM	25590	25130	24604	24012	23356	22666	21912	21056	20077	17708	12604
		BHP	6.73	6.89	7.06	7.23	7.39	7.52	7.62	7.70	7.74	7.62	6.47
		SONES	30.7	30.4	30.1	29.9	29.6	29.4	29.2	29.0	28.7	28.4	28.1

Power Ratings (BHP) does not include drive losses.
Performance certified is for installation type A - free inlet, free outlet.
Performance ratings include the effects of birdscreen in the airstream.
The sound ratings shown are loudness values in fan sones @ 5' (1.5m) in a hemispherical free field calculated per AMCA Standard 301. Values shown are for: Installation Type A: free inlet hemispherical sone levels.

S&P USA Ventilation Systems, LLC., Div. of Soler & Palau Ventilation Group, certifies that the Models SDB shown herein are licensed to bear the AMCA Seal. The ratings shown are based on test and procedures performed in accordance with AMCA Publication 211 and AMCA Publication 311 and comply with the requirement of the AMCA Certified Ratings Program.

UL STANDARD 705

SDB - SIZE 48

Motor HP	RPM		Static Pressure in Inches w.g.									
			0	0.125	0.25	0.375	0.5	0.625	0.75	0.875	1	1.25
1	225	CFM	14951	13070	10456	-	-	-	-	-	-	-
		BHP	0.84	0.91	0.90	-	-	-	-	-	-	-
		SONES	9.4	8.9	8.7	-	-	-	-	-	-	-
1-1/2	250	CFM	16612	14991	13143	13529	-	-	-	-	-	-
		BHP	1.16	1.24	1.25	1.26	-	-	-	-	-	-
		SONES	11.7	11.2	10.8	10.8	-	-	-	-	-	-
1-1/2	275	CFM	18274	16849	14954	12690	-	-	-	-	-	-
		BHP	1.54	1.64	1.67	1.63	-	-	-	-	-	-
		SONES	14.2	13.8	13.4	13.1	-	-	-	-	-	-
2	300	CFM	19935	18664	17032	15735	13446	-	-	-	-	-
		BHP	2.00	2.11	2.17	2.17	2.10	-	-	-	-	-
		SONES	16.6	16.2	15.8	15.5	15.4	-	-	-	-	-
3	325	CFM	21596	20448	19015	17291	15980	18933	-	-	-	-
		BHP	2.54	2.66	2.75	2.76	2.74	2.75	-	-	-	-
		SONES	18.7	18.3	18.0	17.6	17.5	17.4	-	-	-	-
3	350	CFM	23257	22209	20932	19429	18391	15080	13874	-	-	-
		BHP	3.18	3.31	3.41	3.45	3.44	3.27	3.11	-	-	-
		SONES	20.8	20.4	20.1	19.8	19.5	19.4	19.6	-	-	-
5	375	CFM	24918	23954	22803	21470	19941	19312	14117	-	-	-
		BHP	3.91	4.05	4.17	4.23	4.24	4.22	3.71	-	-	-
		SONES	23.6	23.0	22.6	22.1	21.8	21.7	21.9	-	-	-
5	400	CFM	26580	25687	24639	23441	22088	21013	19860	15575	-	-
		BHP	4.74	4.89	5.03	5.12	5.15	5.13	5.11	4.59	-	-
		SONES	26.3	25.9	25.4	25.0	24.6	24.3	24.5	24.6	-	-
7-1/2	425	CFM	28241	27409	26448	25360	24147	22797	22300	20328	18482	-
		BHP	5.69	5.85	6.00	6.11	6.17	6.17	6.16	6.09	5.88	-
		SONES	29.4	28.9	28.4	28.0	27.5	27.1	27.1	27.2	27.3	-
7-1/2	450	CFM	29902	29123	28235	27238	26139	24928	23599	23424	20911	13613
		BHP	6.75	6.92	7.08	7.22	7.30	7.33	7.31	7.30	7.17	5.72
		SONES	32.8	32.3	31.9	31.5	31.0	30.6	30.2	30.2	30.3	30.6
7-1/2	475	CFM	31563	30830	30005	29087	28081	26984	25788	24942	24493	20782
		BHP	7.94	8.12	8.30	8.45	8.56	8.61	8.62	8.60	8.59	8.23
		SONES	36.3	35.9	35.4	35.0	34.6	34.2	33.8	33.6	33.6	33.5

Power Ratings (BHP) does not include drive losses.
Performance certified is for installation type A - free inlet, free outlet.
Performance ratings include the effects of birdscreen in the airstream.
The sound ratings shown are loudness values in fan sones @ 5' (1.5m) in a hemispherical free field calculated per AMCA Standard 301. Values shown are for: Installation Type A: free inlet hemispherical sone levels.

S&P USA Ventilation Systems, LLC., Div. of Soler & Palau Ventilation Group, certifies that the Models SDB shown herein are licensed to bear the AMCA Seal. The ratings shown are based on test and procedures performed in accordance with AMCA Publication 211 and AMCA Publication 311 and comply with the requirement of the AMCA Certified Ratings Program.

UL STANDARD 705

MODEL STXB/STXBe

BELT DRIVE CENTRIFUGAL UPBLAST ROOF EXHAUSTERS

MODEL FEATURES

- Exhaust air up to 37,920 CFM in high static pressure applications up to 3″ w.g.
- Attractive spun aluminum exterior
- Belt drives permit easy performance adjustments when needed
- Non-overloading backward curved wheel for efficiency at higher static pressures
- Roof or sidewall mounting options
- AMCA Air and Sound Licensed
- cULus705, cULus762, or cULus793 Listed for Smoke Control Systems [500°F (260°C) for 4 hours and 1,000° F (538°C) for 15 minutes]
- NFPA - suitable for National Fire Protection Association Installations
- Miami-Dade NOA, Florida Product Approval, and Texas Department of Insurance Listing option available
- EC motor options available for integrated speed control

MODEL OVERVIEW

Model STXB belt drive fans are designed to exhaust air up to 37,920 CFM in high static pressure applications to 3″. The aluminum exterior provides an attractive appearance. Belt drive results in lower operating RPM and sound levels, making the Model STXB well suited to applications where quiet operation is important. Belt drive also permits easy performance adjustments when needed to balance the total ventilation system. The non-overloading backward inclined wheel with its higher static pressure capability makes this unit suitable for either ducted or nonducted applications. Its roof or sidewall mounting options permit location near the area to be ventilated, allowing short duct runs and more efficient operation.

Isolation of motor and drive components from the airstream and the high velocity vertical air discharge make the Model STXB ideally suited for the removal of dirty contaminated and/or high temperature air from processes and buildings. Typical applications include restaurant hoods and similar kitchen exhaust ventilation, fume and smoke removal, laboratory fume hood exhaust and chemical process exhaust.

Applications	
Exhaust Contaminated, Grease Laden and/or High Temperature Air	
• Restaurant Hoods/Kitchen Ventilation	• Laboratory Fume Hoods
• Fume and Smoke Removal	• Chemical Process Exhaust

NEW

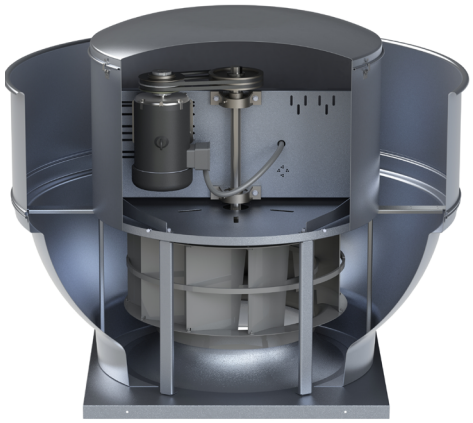

STXB-HT2 and STXB-HT

- Curved non-overloading backward inclined wheel for efficiency at higher static pressures.
- The STXB-HT2 has a steel wheel, and the STXB-HT unit has an aluminum wheel
- The STXB-HT2 can exhaust air up to 19,716 CFM in high static pressure applications up to 2-3/4″ w.g.
- The STXB-HT can exhaust air up to 37,9720 CFM in static pressure applications up to 3″
- Attractive spun aluminum exterior
- Belt drives permit easy performance adjustments when needed
- Increased shafts and bearings to accommodate the heavier wheel and high temperature operation on the STXB-HT2
- Heavier gauge steel components to compensate for additional weight and temperature requirements on the STXB-HT2
- AMCA Air and Sound Licensed
- cULus 705 and 793 Listed

DIMENSIONS (IN)

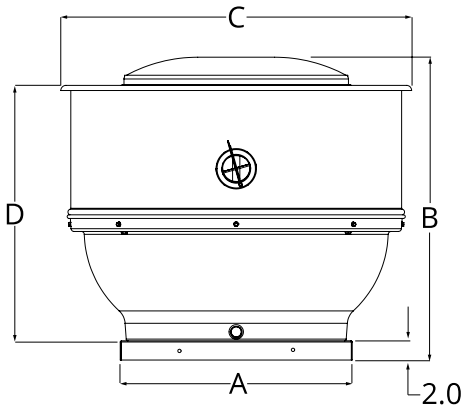

Size	A	B	C	D	Roof Opening	Curb O.D.	Damper (O.D.)	Approximate Weight (lbs)	Approximate Weight (lbs) - STXB-HT2*	Approximate Weight (lbs) STXB- HT*
8	18	29-5/16	28-5/8	24-5/16	13-1/2	16-1/2	12	123	N/A	N/A
10	18	29-5/16	28-5/8	24-5/16	13-1/2	16-1/2	12	123	N/A	N/A
12	20	30-7/8	31-5/16	25-15/16	15-1/2	18-1/2	14	137	N/A	N/A
14	20	30-7/8	31-5/16	25-15/16	15-1/2	18-1/2	14	144	N/A	N/A
15	24	31 1/2	36 1/2	26 5/8	19 1/2	22 1/2	18	159	N/A	159
16	24	31 1/2	36 1/2	26 5/8	19 1/2	22 1/2	18	166	N/A	166
18	30	35 3/4	42 5/8	30 1/2	25 1/2	28 1/2	24	230	N/A	230
20	30	38 5/8	46 7/16	30 1/2	25 1/2	28 1/2	24	233	N/A	233
22	30	38 5/8	46 7/16	33 5/16	25 1/2	28 1/2	24	233	N/A	233
24	36	49 1/8	50 1/2	37 1/2	31 1/2	34 1/2	30	385	435	385
27	36	51 5/8	61 5/16	41 1/2	31 1/2	34 1/2	30	413	478	413
30	42	52 5/16	65 7/16	42 1/4	37 1/2	40 1/2	36	503	531	503
33	42	52 5/16	65 7/16	42 1/4	37 1/2	40 1/2	36	505	540	505
36	42 5/16	50 11/16	64 1/4	44 1/4	37 1/2	40 1/2	36	592	640	592
42	54 1/4	56 15/16	76 1/8	48 3/16	49 1/2	52 1/2	48	779	N/A	779
48	54 1/4	60 3/16	80 7/8	52 3/8	49 1/2	52 1/2	48	869	N/A	869

*Approximate unit weight includes an average cataloged motor, drives, and no crating

Housing

- Curb cap with integral deep single piece spun inlet for efficient performance and prevention of leakage into ductwork.
- Lifting lugs for easy and safe placement of the fan on the roof.
- Heavy-gauge aluminum housing and curb cap for strength and rigidity. Curb cap is galvanized steel on UL 762 and UL793 units.
- Adjustable motor base for proper belt tension and ease of adjustment.
- Enclosed ventilated motor/drive compartment isolates motor and drives from exhaust air.
- Neoprene isolators for reduction of vibration and sound. (Excludes HT2 and HT models)
- Water-tight conduit tube for easy electrical connection without having to wire through the breather tube.
- NFPA - Model STXB is suitable for National Fire Protection Association installations. Contact factory for required accessories.

Centrifugal Wheel

- All aluminum wheel. (Steel for HT2 model)
- Non-overloading Backward-inclined for efficiency at higher static pressure.
- Dynamically balanced for smooth operation.

Motors

- Brands are nationally recognized and locally serviced.
- Single speed drip-proof motors are provided on standard models. (TE motor standard for HT2 and HT)
- Disconnect switch is standard with single speed open drip-proof and totally enclosed motors.

Electronically Commutated Motors (STXBe)

- Brands are nationally recognized and locally serviced
- Easy speed control from 0-10V
- Can be controlled by a PC or building management system
- All motors are rated for continuous duty
- Disconnect is standard
- Motors ship mounted as standard

Drives

- Sized for minimum 150% of drive horse power.
- Machined cast iron adjustable motor pulleys.
- Adjustable base for belt tensioning.
- Nonstatic oil resistant V-Belts.
- Dual groove pulleys for STXB-HT2 option.

Bearings

- 5 year bearing warranty standard STXB / 2 year bearing warranty for RHUL, HT and HT2.
- Heavy-duty ball bearing type.
- Air handling with grease fittings.
- Sized for a minimum L10 life in excess of 100,000 hours

AMCA Seal

- Assures accuracy of Air and Sound Performance.

cULus Label

- cULus 705 Listed Power Roof Ventilator label assures electrical reliability.
- cULus 762us Listed for Restaurant Exhaust Appliance available for applications where required.
- cULus 793 Listed for Smoke Control Systems [500°F (260°C) for 4 hours and 1,000° F (538°C) for 15 minutes] where required

MIAMI-DADE NOA, FLORIDA PRODUCT APPROVAL, AND TEXAS DEPARTMENT OF INSURANCE LISTING OPTION AVAILABLE

This model is designated to carry the Miami-Dade NOA and Florida Product Approval under Miami-Dade NOA# 20-1006.04 and Florida Product Approval FL37199. This model is also listed with the Texas Department of Insurance under Product Evaluation RV-126 for wind load and windborne debris resistance per IRC/IBC 2018. When this option is selected, the model will include tie downs, a fastened motor cover, and a reinforced birdscreen on the SDBD and SDB models. Curbs are required to be self-flashing, galvanized and 18 gauge steel.

MIAMI-DADE COUNTY APPROVED

HIGH WIND TIE DOWN KIT INCLUDES:

- **Tie-downs**
- **Fastened motor cover**
- **Reinforced birdscreen on the SDBD and SDB models**

STXB - SIZE 8

Motor HP	RPM		Static Pressure in Inches w.g.								
			0	0.125	0.25	0.375	0.5	0.625	0.75	0.875	1
1/4	700	CFM	376	201	-	-	-	-	-	-	-
		BHP	0.01	0.01	-	-	-	-	-	-	-
		Sones	2.1	1.3	-	-	-	-	-	-	-
1/4	800	CFM	430	302	-	-	-	-	-	-	-
		BHP	0.02	0.02	-	-	-	-	-	-	-
		Sones	2.9	2.2	-	-	-	-	-	-	-
1/4	900	CFM	483	377	-	-	-	-	-	-	-
		BHP	0.02	0.03	-	-	-	-	-	-	-
		Sones	3.9	3.0	-	-	-	-	-	-	-
1/4	1000	CFM	537	443	301	-	-	-	-	-	-
		BHP	0.03	0.03	0.04	-	-	-	-	-	-
		Sones	4.7	3.8	3.3	-	-	-	-	-	-
1/4	1100	CFM	591	507	400	-	-	-	-	-	-
		BHP	0.04	0.04	0.05	-	-	-	-	-	-
		Sones	5.6	4.8	4.3	-	-	-	-	-	-
1/4	1200	CFM	645	569	482	322	-	-	-	-	-
		BHP	0.05	0.06	0.06	0.06	-	-	-	-	-
		Sones	6.5	5.8	5.4	5.0	-	-	-	-	-
1/4	1300	CFM	698	629	552	445	-	-	-	-	-
		BHP	0.06	0.07	0.08	0.08	-	-	-	-	-
		Sones	7.5	6.9	6.5	6.1	-	-	-	-	-
1/4	1400	CFM	752	687	618	535	402	-	-	-	-
		BHP	0.08	0.09	0.09	0.10	0.10	-	-	-	-
		Sones	8.7	8.1	7.7	7.3	6.9	-	-	-	-
1/4	1500	CFM	806	744	682	612	512	-	-	-	-
		BHP	0.10	0.11	0.11	0.12	0.12	-	-	-	-
		Sones	10.0	9.5	9.0	8.6	8.2	-	-	-	-
1/4	1600	CFM	859	801	745	682	604	500	-	-	-
		BHP	0.12	0.13	0.13	0.14	0.15	0.15	-	-	-
		Sones	11.0	10.4	10.0	9.5	9.2	8.8	-	-	-
1/4	1700	CFM	913	857	807	748	683	595	462	-	-
		BHP	0.14	0.15	0.16	0.16	0.17	0.17	0.17	-	-
		Sones	12.0	11.5	11.0	10.5	10.2	9.8	9.6	-	-
1/4	1800	CFM	967	914	867	812	755	685	595	415	-
		BHP	0.17	0.18	0.19	0.19	0.20	0.21	0.21	0.20	-
		Sones	13.0	12.5	12.0	11.6	11.2	10.9	10.5	10.2	-
1/4	1900	CFM	1021	970	926	875	822	763	687	599	-
		BHP	0.20	0.21	0.22	0.22	0.23	0.24	0.24	0.24	-
		Sones	14.1	13.4	13.0	12.6	12.2	11.9	11.6	11.4	-
1/3	2000	CFM	1074	1026	983	938	887	835	773	693	601
		BHP	0.23	0.24	0.25	0.26	0.27	0.28	0.28	0.28	0.28
		Sones	15.2	14.4	14.0	13.6	13.3	13.0	12.7	12.5	12.2
1/3	2100	CFM	1128	1081	1041	999	951	903	850	785	705
		BHP	0.27	0.28	0.29	0.30	0.30	0.31	0.32	0.33	0.33
		Sones	16.4	15.7	15.0	14.6	14.3	14.0	13.8	13.6	13.4

Power Ratings (BHP) does not include transmission losses.
Performance certified is for installation type A - free inlet, free outlet.
Performance ratings do not include the effects of birdscreen in the airstream.
The sound ratings shown are loudness values in fan sones @ 5' (1.5m) in a hemispherical free field calculated per AMCA Standard 301. Values shown are for: Installation Type A: free inlet hemispherical sone levels.

S&P USA Ventilation Systems, LLC., Div. of Soler & Palau Ventilation Group, certifies that the Models STXB shown herein are licensed to bear the AMCA Seal. The ratings shown are based on test and procedures performed in accordance with AMCA Publication 211 and AMCA Publication 311 and comply with the requirement of the AMCA Certified Ratings Program.

STANDARD 705 for Electrical
STANDARD 762 for Grease Removal

STXB - SIZE 10

Motor HP	RPM		Static Pressure in Inches w.g.								
			0	0.125	0.25	0.375	0.5	0.625	0.75	0.875	1
1/4	650	CFM	545	348	-	-	-	-	-	-	-
		BHP	0.01	0.02	-	-	-	-	-	-	-
		Sones	2.6	2.0	-	-	-	-	-	-	-
1/4	750	CFM	629	468	-	-	-	-	-	-	-
		BHP	0.02	0.03	-	-	-	-	-	-	-
		Sones	3.6	2.9	-	-	-	-	-	-	-
1/4	850	CFM	713	575	384	-	-	-	-	-	-
		BHP	0.03	0.04	0.04	-	-	-	-	-	-
		Sones	4.6	3.9	3.6	-	-	-	-	-	-
1/4	950	CFM	797	675	533	-	-	-	-	-	-
		BHP	0.04	0.05	0.05	-	-	-	-	-	-
		Sones	5.5	4.9	4.5	-	-	-	-	-	-
1/4	1050	CFM	881	771	651	488	-	-	-	-	-
		BHP	0.06	0.06	0.07	0.07	-	-	-	-	-
		Sones	6.5	6.0	5.6	5.4	-	-	-	-	-
1/4	1150	CFM	965	864	758	636	-	-	-	-	-
		BHP	0.07	0.08	0.09	0.10	-	-	-	-	-
		Sones	7.6	7.2	6.7	6.5	-	-	-	-	-
1/4	1250	CFM	1049	958	862	757	628	-	-	-	-
		BHP	0.09	0.10	0.11	0.12	0.12	-	-	-	-
		Sones	8.9	8.5	8.0	7.7	7.5	-	-	-	-
1/4	1350	CFM	1132	1050	961	866	762	619	-	-	-
		BHP	0.12	0.13	0.14	0.15	0.15	0.16	-	-	-
		Sones	10.2	9.9	9.4	8.9	8.8	8.7	-	-	-
1/4	1450	CFM	1216	1141	1057	973	881	774	610	-	-
		BHP	0.14	0.16	0.17	0.18	0.19	0.19	0.19	-	-
		Sones	11.7	11.4	10.9	10.4	10.2	10.0	9.9	-	-
1/4	1550	CFM	1300	1230	1151	1076	991	902	797	615	-
		BHP	0.18	0.19	0.20	0.21	0.22	0.23	0.24	0.23	-
		Sones	13.1	12.7	12.3	11.9	11.5	11.3	11.2	11.0	-
1/3	1650	CFM	1384	1319	1245	1174	1098	1018	930	825	638
		BHP	0.21	0.23	0.24	0.25	0.26	0.27	0.28	0.29	0.28
		Sones	14.3	13.9	13.5	13.1	12.6	12.4	12.3	12.1	12.0
1/3	1750	CFM	1468	1407	1338	1270	1201	1126	1050	962	860
		BHP	0.25	0.27	0.28	0.29	0.30	0.32	0.33	0.34	0.34
		Sones	15.5	15.1	14.8	14.4	13.9	13.5	13.4	13.3	13.2

Power Ratings (BHP) does not include transmission losses.
Performance certified is for installation type A - free inlet, free outlet.
Performance ratings do not include the effects of birdscreen in the airstream.
The sound ratings shown are loudness values in fan sones @ 5' (1.5m) in a hemispherical free field calculated per AMCA Standard 301. Values shown are for: Installation Type A: free inlet hemispherical sone levels.

S&P USA Ventilation Systems, LLC., Div. of Soler & Palau Ventilation Group, certifies that the Models STXB shown herein are licensed to bear the AMCA Seal. The ratings shown are based on test and procedures performed in accordance with AMCA Publication 211 and AMCA Publication 311 and comply with the requirement of the AMCA Certified Ratings Program.

STANDARD 705 for Electrical
STANDARD 762 for Grease Removal

STXB - SIZE 12

Motor HP	RPM		Static Pressure in Inches w.g.									
			0	0.125	0.25	0.375	0.5	0.625	0.75	0.875	1	1.25
1/4	800	CFM	884	715	475	-	-	-	-	-	-	-
		BHP	0.03	0.04	0.04	-	-	-	-	-	-	-
		Sones	4.4	3.9	3.4	-	-	-	-	-	-	-
1/4	900	CFM	995	849	666	318	-	-	-	-	-	-
		BHP	0.05	0.06	0.06	0.06	-	-	-	-	-	-
		Sones	5.5	4.9	4.5	4.0	-	-	-	-	-	-
1/4	1000	CFM	1105	972	821	626	-	-	-	-	-	-
		BHP	0.06	0.07	0.08	0.09	-	-	-	-	-	-
		Sones	6.6	6.0	5.6	5.1	-	-	-	-	-	-
1/4	1100	CFM	1216	1092	967	811	595	-	-	-	-	-
		BHP	0.08	0.09	0.11	0.11	0.11	-	-	-	-	-
		Sones	7.7	7.2	6.8	6.5	6.1	-	-	-	-	-
1/4	1200	CFM	1326	1214	1108	969	813	-	-	-	-	-
		BHP	0.11	0.12	0.13	0.14	0.15	-	-	-	-	-
		Sones	8.9	8.5	8.1	7.8	7.4	-	-	-	-	-
1/4	1300	CFM	1437	1333	1235	1115	986	827	-	-	-	-
		BHP	0.14	0.15	0.17	0.18	0.18	0.19	-	-	-	-
		Sones	10.3	9.9	9.5	9.2	8.8	8.5	-	-	-	-
1/4	1400	CFM	1547	1452	1357	1260	1140	1013	854	-	-	-
		BHP	0.17	0.18	0.20	0.22	0.22	0.23	0.24	-	-	-
		Sones	11.8	11.4	11.0	10.7	10.4	10.0	9.6	-	-	-
1/3	1500	CFM	1658	1569	1477	1396	1285	1177	1050	896	-	-
		BHP	0.21	0.22	0.24	0.26	0.27	0.28	0.29	0.29	-	-
		Sones	13.4	13.0	12.6	12.3	12.0	11.7	11.3	10.9	-	-
1/3	1600	CFM	1768	1686	1599	1522	1431	1326	1221	1098	950	-
		BHP	0.25	0.27	0.29	0.31	0.32	0.33	0.34	0.35	0.35	-
		Sones	14.7	14.2	13.8	13.5	13.2	13.0	12.6	12.3	11.9	-
1/2	1700	CFM	1879	1801	1720	1644	1570	1471	1375	1272	1155	822
		BHP	0.30	0.32	0.34	0.36	0.38	0.39	0.40	0.41	0.42	0.41
		Sones	16.0	15.6	15.2	14.8	14.6	14.3	14.0	13.7	13.3	12.7
1/2	1800	CFM	1989	1916	1840	1765	1698	1616	1520	1431	1331	1086
		BHP	0.36	0.38	0.40	0.42	0.44	0.46	0.47	0.48	0.49	0.50
		Sones	17.3	16.9	16.5	16.2	15.9	15.7	15.4	15.2	14.8	14.1

Power Ratings (BHP) does not include transmission losses.
Performance certified is for installation type A - free inlet, free outlet.
Performance ratings do not include the effects of birdscreen in the airstream.
The sound ratings shown are loudness values in fan sones @ 5' (1.5m) in a hemispherical free field calculated per AMCA Standard 301. Values shown are for: Installation Type A: free inlet hemispherical sone levels.

S&P USA Ventilation Systems, LLC., Div. of Soler & Palau Ventilation Group, certifies that the Models STXB shown herein are licensed to bear the AMCA Seal. The ratings shown are based on test and procedures performed in accordance with AMCA Publication 211 and AMCA Publication 311 and comply with the requirement of the AMCA Certified Ratings Program.

STANDARD 705 for Electrical
STANDARD 762 for Grease Removal

STXB - SIZE 14

Motor HP	RPM		Static Pressure in Inches w.g.										
			0	0.125	0.25	0.375	0.5	0.625	0.75	0.875	1	1.25	1.5
1/4	550	CFM	1037	743	-	-	-	-	-	-	-	-	-
		BHP	0.02	0.03	-	-	-	-	-	-	-	-	-
		SONES	3.3	2.4	-	-	-	-	-	-	-	-	-
1/4	650	CFM	1226	989	627	-	-	-	-	-	-	-	-
		BHP	0.04	0.05	0.05	-	-	-	-	-	-	-	-
		SONES	4.6	3.9	3.2	-	-	-	-	-	-	-	-
1/4	750	CFM	1414	1217	976	-	-	-	-	-	-	-	-
		BHP	0.06	0.08	0.08	-	-	-	-	-	-	-	-
		SONES	6.3	5.7	5.0	-	-	-	-	-	-	-	-
1/4	850	CFM	1603	1433	1232	992	-	-	-	-	-	-	-
		BHP	0.09	0.11	0.12	0.13	-	-	-	-	-	-	-
		SONES	7.5	7.0	6.4	5.8	-	-	-	-	-	-	-
1/4	950	CFM	1791	1642	1471	1280	1036	-	-	-	-	-	-
		BHP	0.13	0.15	0.16	0.17	0.17	-	-	-	-	-	-
		SONES	8.9	8.3	7.8	7.3	6.8	-	-	-	-	-	-
1/4	1050	CFM	1980	1846	1697	1531	1351	1107	-	-	-	-	-
		BHP	0.17	0.19	0.21	0.22	0.23	0.23	-	-	-	-	-
		SONES	10.5	10.0	9.6	9.0	8.5	8.1	-	-	-	-	-
1/3	1150	CFM	2168	2047	1916	1770	1614	1442	1212	-	-	-	-
		BHP	0.23	0.25	0.27	0.28	0.30	0.31	0.31	-	-	-	-
		SONES	12.4	11.9	11.5	11.0	10.5	9.9	9.5	-	-	-	-
1/2	1250	CFM	2357	2246	2128	1999	1859	1713	1551	1342	-	-	-
		BHP	0.29	0.31	0.34	0.36	0.37	0.39	0.40	0.40	-	-	-
		SONES	14.3	13.8	13.5	13.0	12.5	12.0	11.6	11.1	-	-	-
1/2	1350	CFM	2545	2443	2335	2220	2095	1963	1827	1675	1487	-	-
		BHP	0.37	0.39	0.42	0.44	0.46	0.48	0.49	0.50	0.50	-	-
		SONES	16.3	16.0	15.6	15.2	14.8	14.3	13.8	13.3	12.8	-	-
3/4	1450	CFM	2734	2639	2540	2435	2323	2203	2080	1954	1810	1382	-
		BHP	0.45	0.48	0.51	0.53	0.56	0.58	0.59	0.61	0.62	0.60	-
		SONES	18.5	18.1	17.8	17.6	17.1	16.5	16.1	15.7	15.2	14.3	-
3/4	1550	CFM	2922	2834	2742	2646	2544	2436	2322	2207	2086	1805	-
		BHP	0.55	0.58	0.61	0.64	0.67	0.69	0.71	0.73	0.74	0.76	-
		SONES	20.5	20.2	19.9	19.5	19.2	18.7	18.3	17.8	17.4	16.5	-
1	1650	CFM	3111	3028	2942	2853	2760	2661	2558	2450	2341	2107	1809
		BHP	0.67	0.70	0.73	0.76	0.79	0.81	0.84	0.86	0.88	0.91	0.91
		SONES	22.2	21.9	21.6	21.4	21.1	20.7	20.2	19.7	19.3	18.4	17.6

Power Ratings (BHP) does not include transmission losses.
Performance certified is for installation type A - free inlet, free outlet.
Performance ratings do not include the effects of birdscreen in the airstream.
The sound ratings shown are loudness values in fan sones @ 5' (1.5m) in a hemispherical free field calculated per AMCA Standard 301. Values shown are for: Installation Type A: free inlet hemispherical sone levels.

S&P USA Ventilation Systems, LLC., Div. of Soler & Palau Ventilation Group, certifies that the Models STXB shown herein are licensed to bear the AMCA Seal. The ratings shown are based on test and procedures performed in accordance with AMCA Publication 211 and AMCA Publication 311 and comply with the requirement of the AMCA Certified Ratings Program.

STANDARD 705 for Electrical
STANDARD 762 for Grease Removal

STXB - SIZE 15

Motor HP	RPM		Static Pressure in Inches w.g.											
			0	0.125	0.25	0.375	0.5	0.625	0.75	0.875	1	1.25	1.5	1.75
1/4	700	CFM	1612	1394	1126	-	-	-	-	-	-	-	-	-
		BHP	0.06	0.07	0.09	-	-	-	-	-	-	-	-	-
		Sones	5.5	4.8	4.4	-	-	-	-	-	-	-	-	-
1/4	800	CFM	1842	1656	1448	1162	-	-	-	-	-	-	-	-
		BHP	0.09	0.11	0.12	0.13	-	-	-	-	-	-	-	-
		Sones	6.9	6.3	5.8	5.8	-	-	-	-	-	-	-	-
1/4	900	CFM	2072	1910	1729	1524	1249	-	-	-	-	-	-	-
		BHP	0.12	0.15	0.16	0.18	0.19	-	-	-	-	-	-	-
		Sones	8.3	7.7	7.2	7.0	7.0	-	-	-	-	-	-	-
1/4	1000	CFM	2302	2160	1998	1832	1627	1366	-	-	-	-	-	-
		BHP	0.17	0.19	0.22	0.24	0.25	0.26	-	-	-	-	-	-
		Sones	9.7	9.1	8.6	8.3	8.3	8.3	-	-	-	-	-	-
1/3	1100	CFM	2533	2405	2260	2111	1953	1757	1519	-	-	-	-	-
		BHP	0.22	0.25	0.28	0.30	0.32	0.34	0.34	-	-	-	-	-
		Sones	11.4	10.7	10.2	9.9	9.6	9.7	10.5	-	-	-	-	-
1/2	1200	CFM	2763	2648	2517	2382	2244	2091	1907	1694	1147	-	-	-
		BHP	0.29	0.32	0.35	0.38	0.40	0.42	0.44	0.44	0.40	-	-	-
		Sones	13.2	12.7	12.3	11.9	11.5	11.3	12.3	11.5	11.6	-	-	-
3/4	1300	CFM	2993	2888	2770	2646	2519	2391	2244	2073	1876	-	-	-
		BHP	0.37	0.40	0.43	0.46	0.49	0.51	0.54	0.56	0.56	-	-	-
		Sones	15.2	14.8	14.4	14.0	13.6	13.3	14.1	13.3	13.4	-	-	-
3/4	1400	CFM	3223	3126	3019	2905	2788	2671	2549	2410	2252	1850	-	-
		BHP	0.46	0.50	0.53	0.56	0.59	0.62	0.65	0.68	0.70	0.70	-	-
		Sones	17.4	17.0	16.7	16.3	15.9	15.6	16.4	15.2	15.3	15.5	-	-
1	1500	CFM	3453	3363	3266	3160	3052	2943	2833	2718	2588	2279	1750	-
		BHP	0.56	0.60	0.64	0.68	0.71	0.74	0.77	0.80	0.83	0.87	0.84	-
		Sones	19.8	19.4	19.0	18.6	18.3	18.0	18.5	17.3	17.3	17.5	17.7	-
1	1600	CFM	3684	3600	3510	3412	3311	3210	3107	3004	2895	2638	2325	1669
		BHP	0.68	0.73	0.77	0.81	0.84	0.88	0.91	0.94	0.97	1.04	1.05	0.98
		Sones	21.5	21.2	20.9	20.5	20.2	19.8	19.4	19.1	18.7	18.9	19.1	19.3

Power Ratings (BHP) does not include transmission losses.
Performance certified is for installation type A - free inlet, free outlet.
Performance ratings do not include the effects of birdscreen in the airstream.
The sound ratings shown are loudness values in fan sones @ 5' (1.5m) in a hemispherical free field calculated per AMCA Standard 301. Values shown are for: Installation Type A: free inlet hemispherical sone levels.

S&P USA Ventilation Systems, LLC., Div. of Soler & Palau Ventilation Group, certifies that the Models STXB shown herein are licensed to bear the AMCA Seal. The ratings shown are based on test and procedures performed in accordance with AMCA Publication 211 and AMCA Publication 311 and comply with the requirement of the AMCA Certified Ratings Program.

STANDARD 705 for Electrical
STANDARD 762 for Grease Removal

STXB - SIZE 15 HIGH PRESSURE

Motor HP	RPM		Static Pressure in Inches w.g.												
			0.25	0.375	0.5	0.625	0.75	0.875	1	1.25	1.5	1.75	2	2.25	2.5
1/4	750	CFM	881	483	-	-	-	-	-	-	-	-	-	-	-
		BHP	0.07	0.07	-	-	-	-	-	-	-	-	-	-	-
		Sones	4.4	4.3	-	-	-	-	-	-	-	-	-	-	-
1/4	850	CFM	1110	908	439	-	-	-	-	-	-	-	-	-	-
		BHP	0.10	0.11	0.10	-	-	-	-	-	-	-	-	-	-
		Sones	5.9	5.5	5.4	-	-	-	-	-	-	-	-	-	-
1/4	950	CFM	1324	1154	960	488	-	-	-	-	-	-	-	-	-
		BHP	0.13	0.14	0.15	0.13	-	-	-	-	-	-	-	-	-
		Sones	7.4	6.7	6.6	6.4	-	-	-	-	-	-	-	-	-
1/4	1050	CFM	1523	1379	1221	1035	606	-	-	-	-	-	-	-	-
		BHP	0.16	0.18	0.20	0.20	0.19	-	-	-	-	-	-	-	-
		Sones	9.0	8.3	7.8	7.7	7.6	-	-	-	-	-	-	-	-
1/4	1150	CFM	1713	1594	1454	1308	1133	767	-	-	-	-	-	-	-
		BHP	0.21	0.23	0.25	0.26	0.27	0.25	-	-	-	-	-	-	-
		Sones	10.6	9.9	9.3	8.9	8.8	8.7	-	-	-	-	-	-	-
1/3	1250	CFM	1898	1795	1675	1544	1409	1250	952	-	-	-	-	-	-
		BHP	0.26	0.28	0.30	0.32	0.33	0.34	0.34	-	-	-	-	-	-
		Sones	12.3	11.6	11.0	10.4	10.2	10.0	10.0	-	-	-	-	-	-
1/2	1350	CFM	2079	1987	1886	1768	1647	1521	1377	-	-	-	-	-	-
		BHP	0.32	0.34	0.36	0.39	0.41	0.42	0.43	-	-	-	-	-	-
		Sones	14.1	13.4	12.9	12.2	11.6	11.5	11.4	-	-	-	-	-	-
1/2	1450	CFM	2258	2175	2085	1985	1873	1760	1643	1336	-	-	-	-	-
		BHP	0.38	0.41	0.44	0.46	0.48	0.50	0.52	0.54	-	-	-	-	-
		Sones	16.0	15.4	14.8	14.2	13.7	13.2	13.0	13.0	-	-	-	-	-
3/4	1550	CFM	2436	2359	2278	2191	2092	1987	1881	1652	1276	-	-	-	-
		BHP	0.46	0.49	0.52	0.54	0.57	0.59	0.62	0.65	0.65	-	-	-	-
		Sones	18.0	17.4	16.8	16.3	15.7	15.1	14.7	14.4	14.4	-	-	-	-
3/4	1650	CFM	2612	2540	2466	2388	2303	2208	2109	1907	1677	1238	-	-	-
		BHP	0.54	0.58	0.61	0.64	0.66	0.69	0.72	0.76	0.79	0.77	-	-	-
		Sones	19.9	19.3	18.8	18.3	17.8	17.3	16.8	16.2	15.8	15.7	-	-	-
1	1750	CFM	2787	2720	2651	2579	2503	2420	2330	2142	1947	1709	1235	-	-
		BHP	0.64	0.68	0.71	0.75	0.77	0.80	0.83	0.88	0.92	0.94	0.91	-	-
		Sones	21.8	21.2	20.7	20.2	19.7	19.3	18.9	18.1	17.6	17.3	17.0	-	-
1	1850	CFM	2961	2898	2833	2767	2698	2624	2544	2370	2189	1998	1752	1270	548
		BHP	0.75	0.79	0.82	0.86	0.89	0.92	0.95	1.01	1.06	1.10	1.12	1.06	0.84
		Sones	23.7	23.2	22.6	22.1	21.7	21.3	20.9	20.0	19.3	19.0	18.7	18.5	18.4

Power Ratings (BHP) does not include transmission losses.
Performance certified is for installation type A - free inlet, free outlet.
Performance ratings do not include the effects of birdscreen in the airstream.
The sound ratings shown are loudness values in fan sones @ 5' (1.5m) in a hemispherical free field calculated per AMCA Standard 301. Values shown are for: Installation Type A: free inlet hemispherical sone levels.

S&P USA Ventilation Systems, LLC., Div. of Soler & Palau Ventilation Group, certifies that the Models STXB shown herein are licensed to bear the AMCA Seal. The ratings shown are based on test and procedures performed in accordance with AMCA Publication 211 and AMCA Publication 311 and comply with the requirement of the AMCA Certified Ratings Program.

STANDARD 705 for Electrical
STANDARD 762 for Grease Removal

STXB - SIZE 16

Motor HP	RPM		Static Pressure in Inches w.g.										
			0	0.125	0.25	0.375	0.5	0.625	0.75	0.875	1	1.25	1.5
1/4	700	CFM	1988	1762	1494	977	-	-	-	-	-	-	-
		BHP	0.09	0.10	0.12	0.12	-	-	-	-	-	-	-
		Sones	6.8	6.3	5.3	4.2	-	-	-	-	-	-	-
1/4	750	CFM	2130	1920	1683	1363	-	-	-	-	-	-	-
		BHP	0.10	0.12	0.14	0.15	-	-	-	-	-	-	-
		Sones	8.0	7.6	6.6	5.3	-	-	-	-	-	-	-
1/4	800	CFM	2272	2076	1863	1596	1006	-	-	-	-	-	-
		BHP	0.13	0.15	0.17	0.18	0.17	-	-	-	-	-	-
		Sones	8.7	8.3	7.5	6.4	5.3	-	-	-	-	-	-
1/4	850	CFM	2414	2231	2035	1801	1495	-	-	-	-	-	-
		BHP	0.15	0.17	0.20	0.22	0.22	-	-	-	-	-	-
		Sones	9.5	9.2	8.4	7.4	6.3	-	-	-	-	-	-
1/4	900	CFM	2555	2383	2201	1992	1740	1208	-	-	-	-	-
		BHP	0.18	0.20	0.23	0.25	0.26	0.24	-	-	-	-	-
		Sones	10.3	9.9	9.3	8.5	7.4	6.5	-	-	-	-	-
1/4	950	CFM	2697	2535	2364	2175	1952	1670	-	-	-	-	-
		BHP	0.21	0.24	0.26	0.29	0.30	0.31	-	-	-	-	-
		Sones	11.2	10.6	10.1	9.3	8.4	7.5	-	-	-	-	-
1/3	1000	CFM	2839	2685	2524	2352	2152	1917	1511	-	-	-	-
		BHP	0.25	0.27	0.30	0.33	0.35	0.36	0.35	-	-	-	-
		Sones	12.1	11.5	10.9	10.2	9.4	8.5	7.8	-	-	-	-
1/2	1050	CFM	2981	2835	2682	2522	2341	2132	1875	-	-	-	-
		BHP	0.29	0.32	0.34	0.37	0.39	0.41	0.42	-	-	-	-
		Sones	13.0	12.5	12.0	11.2	10.4	9.6	8.9	-	-	-	-
1/2	1100	CFM	3123	2984	2839	2688	2523	2335	2121	1822	-	-	-
		BHP	0.33	0.36	0.39	0.42	0.44	0.47	0.48	0.48	-	-	-
		Sones	13.9	13.4	13.0	12.3	11.5	10.8	10.0	9.3	-	-	-
3/4	1150	CFM	3265	3132	2994	2852	2699	2528	2334	2105	1687	-	-
		BHP	0.38	0.41	0.44	0.47	0.50	0.52	0.54	0.55	0.53	-	-
		Sones	14.9	14.4	14.0	13.4	12.8	12.2	11.3	10.6	9.9	-	-
3/4	1200	CFM	3407	3280	3148	3012	2871	2713	2539	2344	2103	-	-
		BHP	0.43	0.46	0.49	0.52	0.56	0.58	0.61	0.62	0.62	-	-
		Sones	15.9	15.5	15.1	14.7	14.1	13.5	12.8	11.9	11.2	-	-
3/4	1250	CFM	3549	3427	3301	3171	3038	2892	2732	2555	2355	-	-
		BHP	0.48	0.52	0.55	0.58	0.62	0.65	0.67	0.69	0.71	-	-
		Sones	17.0	16.8	16.5	16.2	15.5	14.9	14.3	13.4	12.6	-	-
1	1300	CFM	3691	3574	3453	3329	3202	3067	2919	2757	2579	2051	-
		BHP	0.54	0.58	0.61	0.65	0.68	0.72	0.75	0.77	0.79	0.78	-
		Sones	18.4	18.1	17.8	17.5	17.0	16.4	15.8	15.0	14.1	12.6	-
1	1350	CFM	3833	3720	3605	3485	3364	3238	3100	2950	2788	2394	-
		BHP	0.61	0.65	0.68	0.72	0.75	0.79	0.82	0.85	0.87	0.89	-
		Sones	19.8	19.5	19.2	18.9	18.4	17.8	17.3	16.6	15.7	14.0	-
1	1400	CFM	3975	3867	3755	3641	3524	3404	3276	3137	2988	2645	1953
		BHP	0.68	0.72	0.75	0.79	0.83	0.87	0.90	0.93	0.96	0.99	0.93
		Sones	21.1	20.9	20.7	20.4	20.1	19.4	18.8	18.2	17.4	15.7	14.1

Power Ratings (BHP) does not include transmission losses.
Performance certified is for installation type A - free inlet, free outlet.
Performance ratings do not include the effects of birdscreen in the airstream.
The sound ratings shown are loudness values in fan sones @ 5' (1.5m) in a hemispherical free field calculated per AMCA Standard 301. Values shown are for: Installation Type A: free inlet hemispherical sone levels.

S&P USA Ventilation Systems, LLC., Div. of Soler & Palau Ventilation Group, certifies that the Models STXB shown herein are licensed to bear the AMCA Seal. The ratings shown are based on test and procedures performed in accordance with AMCA Publication 211 and AMCA Publication 311 and comply with the requirement of the AMCA Certified Ratings Program.

STANDARD 705 for Electrical
STANDARD 762 for Grease Removal

STXB - SIZE 16 HIGH PRESSURE

Motor HP	RPM		Static Pressure in Inches w.g.											
			0.25	0.375	0.5	0.625	0.75	0.875	1	1.25	1.5	1.75	2	2.25
1/4	800	CFM	1294	1054	-	-	-	-	-	-	-	-	-	-
		BHP	0.11	0.12	-	-	-	-	-	-	-	-	-	-
		Sones	6.2	5.7	-	-	-	-	-	-	-	-	-	-
1/4	900	CFM	1560	1362	1140	603	-	-	-	-	-	-	-	-
		BHP	0.15	0.16	0.17	0.15	-	-	-	-	-	-	-	-
		Sones	7.9	7.4	6.9	6.4	-	-	-	-	-	-	-	-
1/4	1000	CFM	1797	1641	1458	1253	804	-	-	-	-	-	-	-
		BHP	0.19	0.21	0.23	0.24	0.22	-	-	-	-	-	-	-
		Sones	9.4	8.9	8.6	8.1	7.7	-	-	-	-	-	-	-
1/3	1100	CFM	2027	1905	1742	1576	1389	1040	-	-	-	-	-	-
		BHP	0.24	0.27	0.29	0.31	0.32	0.31	-	-	-	-	-	-
		Sones	10.9	10.5	10.2	9.8	9.4	9.0	-	-	-	-	-	-
1/2	1200	CFM	2257	2144	2017	1865	1712	1539	1283	-	-	-	-	-
		BHP	0.30	0.33	0.36	0.38	0.40	0.41	0.41	-	-	-	-	-
		Sones	12.7	12.3	11.9	11.6	11.2	10.8	10.4	-	-	-	-	-
1/2	1300	CFM	2483	2374	2272	2143	2003	1861	1700	1119	-	-	-	-
		BHP	0.37	0.40	0.43	0.46	0.48	0.50	0.52	0.50	-	-	-	-
		Sones	14.4	14.0	13.7	13.4	13.1	12.7	12.3	11.9	-	-	-	-
3/4	1400	CFM	2705	2604	2509	2409	2281	2152	2020	1721	995	-	-	-
		BHP	0.46	0.49	0.52	0.55	0.58	0.60	0.63	0.65	0.59	-	-	-
		Sones	16.6	16.2	15.8	15.4	15.1	14.8	14.5	14.0	13.5	-	-	-
1	1500	CFM	2925	2833	2739	2652	2551	2430	2309	2056	1742	944	-	-
		BHP	0.55	0.59	0.62	0.66	0.69	0.72	0.74	0.79	0.81	0.70	-	-
		Sones	18.8	18.4	18.2	17.8	17.5	17.1	16.8	16.1	15.5	15.2	-	-
1	1600	CFM	3142	3058	2969	2886	2802	2702	2588	2361	2109	1775	969	-
		BHP	0.66	0.69	0.73	0.77	0.81	0.84	0.87	0.93	0.96	0.98	0.83	-
		Sones	20.9	20.5	20.0	19.7	19.4	19.1	18.8	18.3	17.6	17.0	16.6	-
1	1700	CFM	3357	3281	3198	3115	3039	2958	2861	2646	2430	2186	1834	1061
		BHP	0.78	0.82	0.86	0.90	0.94	0.98	1.01	1.07	1.13	1.16	1.17	1.01
		Sones	23.1	22.7	22.3	22.0	21.7	21.4	21.1	20.5	19.9	19.1	18.5	18.1

Power Ratings (BHP) does not include transmission losses.
Performance certified is for installation type A - free inlet, free outlet.
Performance ratings do not include the effects of birdscreen in the airstream.
The sound ratings shown are loudness values in fan sones @ 5' (1.5m) in a hemispherical free field calculated per AMCA Standard 301. Values shown are for: Installation Type A: free inlet hemispherical sone levels.

S&P USA Ventilation Systems, LLC., Div. of Soler & Palau Ventilation Group, certifies that the Models STXB shown herein are licensed to bear the AMCA Seal. The ratings shown are based on test and procedures performed in accordance with AMCA Publication 211 and AMCA Publication 311 and comply with the requirement of the AMCA Certified Ratings Program.

STANDARD 705 for Electrical
STANDARD 762 for Grease Removal

STXB - SIZE 18

Motor HP	RPM		Static Pressure in Inches w.g.												
			0	0.125	0.25	0.375	0.5	0.625	0.75	0.875	1	1.25	1.5	1.75	2
1/4	600	CFM	2395	2112	1802	1306	-	-	-	-	-	-	-	-	-
		BHP	0.12	0.14	0.15	0.15	-	-	-	-	-	-	-	-	-
		Sones	7.3	6.0	5.1	4.5	-	-	-	-	-	-	-	-	-
1/4	700	CFM	2794	2550	2307	2011	1528	-	-	-	-	-	-	-	-
		BHP	0.19	0.21	0.23	0.25	0.24	-	-	-	-	-	-	-	-
		Sones	9.1	8.1	7.4	6.8	6.3	-	-	-	-	-	-	-	-
1/2	800	CFM	3194	2979	2770	2543	2271	1836	-	-	-	-	-	-	-
		BHP	0.29	0.31	0.34	0.35	0.37	0.36	-	-	-	-	-	-	-
		Sones	11.2	10.5	9.9	9.3	8.8	8.2	-	-	-	-	-	-	-
1/2	900	CFM	3593	3402	3213	3027	2816	2574	2203	1876	-	-	-	-	-
		BHP	0.41	0.44	0.46	0.49	0.51	0.52	0.51	0.49	-	-	-	-	-
		Sones	13.5	12.9	12.4	11.8	11.2	10.6	10.1	9.7	-	-	-	-	-
3/4	1000	CFM	3992	3820	3650	3483	3311	3116	2903	2593	2215	-	-	-	-
		BHP	0.56	0.59	0.62	0.65	0.68	0.70	0.71	0.71	0.69	-	-	-	-
		Sones	15.5	15.1	14.6	14.1	13.6	13.1	12.6	12.1	11.6	-	-	-	-
1	1100	CFM	4391	4235	4079	3925	3775	3615	3437	3249	3000	2399	-	-	-
		BHP	0.75	0.78	0.82	0.85	0.88	0.91	0.93	0.95	0.95	0.91	-	-	-
		Sones	17.7	17.4	17.0	16.6	16.2	15.7	15.3	14.9	14.5	13.7	-	-	-
1-1/2	1200	CFM	4790	4647	4504	4362	4223	4084	3936	3773	3605	3135	2612	-	-
		BHP	0.97	1.01	1.05	1.08	1.12	1.15	1.18	1.20	1.22	1.23	1.19	-	-
		Sones	19.9	19.6	19.4	19.1	18.8	18.4	18.0	17.6	17.2	16.6	15.9	-	-
2	1300	CFM	5189	5057	4925	4794	4664	4536	4407	4270	4121	3800	3323	2834	-
		BHP	1.23	1.27	1.31	1.36	1.39	1.43	1.46	1.49	1.52	1.57	1.56	1.51	-
		Sones	22.8	22.5	22.2	21.9	21.6	21.2	20.8	20.4	20.0	19.4	18.7	18.2	-
2	1400	CFM	5589	5466	5343	5221	5100	4979	4862	4741	4614	4332	4022	3557	3056
		BHP	1.54	1.58	1.63	1.67	1.72	1.76	1.79	1.83	1.86	1.92	1.96	1.95	1.88
		Sones	25.7	25.4	25.2	24.9	24.6	24.4	24.0	23.6	23.2	22.5	21.8	21.2	20.5

Power Ratings (BHP) does not include transmission losses.
Performance certified is for installation type A - free inlet, free outlet.
Performance ratings do not include the effects of birdscreen in the airstream.
The sound ratings shown are loudness values in fan sones @ 5' (1.5m) in a hemispherical free field calculated per AMCA Standard 301. Values shown are for: Installation Type A: free inlet hemispherical sone levels.

S&P USA Ventilation Systems, LLC., Div. of Soler & Palau Ventilation Group, certifies that the Models STXB shown herein are licensed to bear the AMCA Seal. The ratings shown are based on test and procedures performed in accordance with AMCA Publication 211 and AMCA Publication 311 and comply with the requirement of the AMCA Certified Ratings Program.

STANDARD 705 for Electrical
STANDARD 762 for Grease Removal

STXB - SIZE 18 High Pressure

Motor HP	RPM		Static Pressure in Inches w.g.											
			0.25	0.375	0.5	0.75	1	1.25	1.5	1.75	2	2.25	2.5	2.75
1/3	850	CFM	2328	2151	1941	1297	-	-	-	-	-	-	-	-
		BHP	0.29	0.31	0.33	0.32	-	-	-	-	-	-	-	-
		Sones	9.6	9.0	8.4	8.4	-	-	-	-	-	-	-	-
1/2	950	CFM	2667	2527	2360	1941	-	-	-	-	-	-	-	-
		BHP	0.39	0.41	0.43	0.46	-	-	-	-	-	-	-	-
		Sones	11.6	11.2	10.7	10.4	-	-	-	-	-	-	-	-
3/4	1050	CFM	2997	2882	2745	2417	1976	-	-	-	-	-	-	-
		BHP	0.51	0.54	0.57	0.61	0.62	-	-	-	-	-	-	-
		Sones	14.0	13.7	13.2	12.5	12.5	-	-	-	-	-	-	-
1	1150	CFM	3321	3221	3109	2837	2504	2054	-	-	-	-	-	-
		BHP	0.65	0.69	0.72	0.77	0.82	0.82	-	-	-	-	-	-
		Sones	16.6	16.3	15.9	15.0	14.4	14.5	-	-	-	-	-	-
1	1250	CFM	3643	3553	3457	3226	2953	2626	2180	-	-	-	-	-
		BHP	0.82	0.86	0.90	0.96	1.02	1.05	1.05	-	-	-	-	-
		Sones	19.2	18.9	18.5	17.8	17.1	16.6	16.8	-	-	-	-	-
1-1/2	1350	CFM	3962	3879	3794	3597	3364	3095	2779	2354	-	-	-	-
		BHP	1.02	1.06	1.11	1.18	1.24	1.30	1.33	1.32	-	-	-	-
		Sones	21.8	21.5	21.3	20.6	20.0	19.4	19.1	19.2	-	-	-	-
2	1450	CFM	4279	4201	4124	3954	3750	3522	3261	2959	2565	1996	-	-
		BHP	1.25	1.30	1.34	1.43	1.50	1.57	1.62	1.64	1.64	1.56	-	-
		Sones	24.7	24.4	24.1	23.6	23.0	22.4	21.8	21.7	21.9	22.0	-	-
2	1550	CFM	4595	4523	4450	4299	4122	3920	3698	3447	3162	2804	2350	-
		BHP	1.52	1.56	1.61	1.71	1.79	1.86	1.93	1.99	2.01	2.00	1.96	-
		Sones	27.6	27.4	27.1	26.6	26.1	25.5	25.0	24.5	24.5	24.6	24.8	-

Power Ratings (BHP) does not include transmission losses.
Performance certified is for installation type A - free inlet, free outlet.
Performance ratings do not include the effects of birdscreen in the airstream.
The sound ratings shown are loudness values in fan sones @ 5′ (1.5m) in a hemispherical free field calculated per AMCA Standard 301. Values shown are for: Installation Type A: free inlet hemispherical sone levels.

S&P USA Ventilation Systems, LLC., Div. of Soler & Palau Ventilation Group, certifies that the Models STXB shown herein are licensed to bear the AMCA Seal. The ratings shown are based on test and procedures performed in accordance with AMCA Publication 211 and AMCA Publication 311 and comply with the requirement of the AMCA Certified Ratings Program.

STANDARD 705 for Electrical
STANDARD 762 for Grease Removal

STXBe/STXBeRHUL - Size 18

Motor HP	RPM		Static Pressure (in. wg)												
			0.00	0.13	0.25	0.38	0.50	0.63	0.75	0.88	1.00	1.25	1.50	1.75	2.00
2HP 1800 RPM	500	CFM	1872	1557	1130	-	-	-	-	-	-	-	-	-	-
		BHP	0.06	0.09	0.09	-	-	-	-	-	-	-	-	-	-
		SONES	8.0	5.6	4.0	-	-	-	-	-	-	-	-	-	-
	550	CFM	2059	1780	1444	-	-	-	-	-	-	-	-	-	-
		BHP	0.08	0.11	0.13	-	-	-	-	-	-	-	-	-	-
		SONES	8.7	6.8	5.2	-	-	-	-	-	-	-	-	-	-
	600	CFM	2246	1996	1705	1289	-	-	-	-	-	-	-	-	-
		BHP	0.10	0.15	0.16	0.16	-	-	-	-	-	-	-	-	-
		SONES	10.1	8.1	6.5	5.5	-	-	-	-	-	-	-	-	-
	650	CFM	2433	2205	1943	1632	-	-	-	-	-	-	-	-	-
		BHP	0.13	0.18	0.20	0.21	-	-	-	-	-	-	-	-	-
		SONES	11.1	9.3	7.8	6.7	-	-	-	-	-	-	-	-	-
	700	CFM	2620	2410	2170	1912	1545	-	-	-	-	-	-	-	-
		BHP	0.16	0.23	0.24	0.26	0.25	-	-	-	-	-	-	-	-
		SONES	12.2	10.6	9.0	8.0	7.3	-	-	-	-	-	-	-	-
	750	CFM	2808	2612	2394	2162	1881	1442	-	-	-	-	-	-	-
		BHP	0.20	0.28	0.29	0.31	0.32	0.30	-	-	-	-	-	-	-
		SONES	13.4	11.9	10.3	9.2	8.5	7.9	-	-	-	-	-	-	-
	800	CFM	2995	2813	2614	2397	2164	1854	-	-	-	-	-	-	-
		BHP	0.24	0.33	0.35	0.37	0.39	0.38	-	-	-	-	-	-	-
		SONES	14.5	13.1	11.6	10.5	9.7	9.1	-	-	-	-	-	-	-
	850	CFM	3182	3011	2829	2625	2418	2172	1834	-	-	-	-	-	-
		BHP	0.29	0.39	0.42	0.43	0.45	0.46	0.45	-	-	-	-	-	-
		SONES	15.6	14.3	12.9	11.7	11.0	10.4	9.9	-	-	-	-	-	-
	900	CFM	3369	3208	3039	2850	2658	2448	2189	1827	-	-	-	-	-
		BHP	0.35	0.46	0.49	0.51	0.53	0.55	0.55	0.53	-	-	-	-	-
		SONES	16.7	15.5	14.2	13.2	12.2	11.7	11.2	10.8	-	-	-	-	-
	950	CFM	3556	3404	3245	3074	2889	2702	2487	2217	1838	-	-	-	-
		BHP	0.41	0.53	0.57	0.59	0.61	0.63	0.65	0.64	0.61	-	-	-	-
		SONES	17.9	16.7	15.6	14.4	13.7	13.1	12.6	12.1	11.7	-	-	-	-
	1000	CFM	3743	3599	3449	3289	3114	2942	2756	2536	2260	-	-	-	-
		BHP	0.48	0.60	0.66	0.68	0.71	0.72	0.75	0.76	0.74	-	-	-	-
		SONES	19.1	17.9	16.9	15.8	15.0	14.5	14.1	13.5	13.2	-	-	-	-
	1050	CFM	3931	3794	3652	3503	3339	3177	3006	2818	2595	1926	-	-	-
		BHP	0.55	0.69	0.76	0.78	0.81	0.83	0.85	0.87	0.87	0.82	-	-	-
		SONES	20.3	19.2	18.1	17.2	16.5	16.0	15.5	15.0	14.6	13.8	-	-	-
	1100	CFM	4118	3987	3852	3712	3560	3401	3244	3078	2889	2389	-	-	-
		BHP	0.63	0.78	0.87	0.90	0.92	0.94	0.96	0.99	1.01	0.98	-	-	-
		SONES	21.5	20.5	19.4	18.6	18.0	17.5	17.0	16.6	16.2	15.2	-	-	-
	1150	CFM	4305	4180	4052	3919	3778	3626	3476	3323	3158	2748	2108	-	-
		BHP	0.72	0.88	0.98	1.02	1.04	1.07	1.09	1.11	1.14	1.14	1.07	-	-
		SONES	22.8	21.7	20.7	19.9	19.4	19.0	18.5	18.1	17.7	16.9	16.1	-	-
	1200	CFM	4492	4373	4250	4124	3992	3849	3703	3560	3410	3059	2577	-	-
		BHP	0.82	0.99	1.10	1.15	1.17	1.20	1.22	1.25	1.28	1.31	1.27	-	-
		SONES	24.1	23.0	22.0	21.2	20.9	20.5	20.0	19.6	19.2	18.4	17.7	-	-
	1250	CFM	4679	4565	4447	4327	4202	4069	3928	3791	3651	3341	2946	2362	-
		BHP	0.93	1.10	1.23	1.29	1.32	1.35	1.37	1.39	1.42	1.48	1.46	1.39	-
		SONES	25.4	24.4	23.4	22.7	22.4	22.0	21.6	21.2	20.8	20.0	19.3	18.6	-
	1300	CFM	4866	4756	4644	4529	4410	4285	4152	4021	3886	3604	3264	2818	-
		BHP	1.05	1.23	1.37	1.44	1.48	1.50	1.53	1.56	1.58	1.65	1.66	1.62	-
		SONES	26.6	25.7	24.8	24.3	24.0	23.6	23.3	22.8	22.4	21.7	21.0	20.2	-
	1350	CFM	5054	4948	4840	4729	4616	4499	4372	4242	4115	3853	3554	3214	2663
		BHP	1.17	1.36	1.51	1.60	1.65	1.67	1.70	1.73	1.75	1.81	1.86	1.84	1.77
		SONES	28.0	27.2	26.4	25.8	25.5	25.3	24.9	24.5	24.1	23.3	22.6	22.0	21.3
	1400	CFM	5241	5139	5035	4929	4821	4709	4590	4466	4341	4094	3823	3501	3089
		BHP	1.31	1.51	1.66	1.77	1.83	1.85	1.88	1.91	1.94	1.99	2.07	2.07	2.03
		SONES	29.7	28.8	28.0	27.4	27.1	26.8	26.5	26.1	25.7	25.0	24.2	23.5	22.9

Power Ratings (BHP) does not include transmission losses.
Performance certified is for installation type A - free inlet, free outlet.
Performance ratings do not include the effects of birdscreen in the airstream.
The sound ratings shown are loudness values in fan sones @ 5' (1.5m) in a hemispherical free field calculated per AMCA Standard 301. Values shown are for: Installation Type A: free inlet hemispherical sone levels.

S&P USA Ventilation Systems, LLC., Div. of Soler & Palau Ventilation Group, certifies that the Models STXB shown herein are licensed to bear the AMCA Seal. The ratings shown are based on test and procedures performed in accordance with AMCA Publication 211 and AMCA Publication 311 and comply with the requirement of the AMCA Certified Ratings Program.

STANDARD 705 for Electrical
STANDARD 762 for Grease Removal

STXB - SIZE 20

Motor HP	RPM		Static Pressure in Inches w.g.											
			0	0.125	0.25	0.375	0.5	.625	.75	.875	1	1.25	1.5	1.75
1/4	500	CFM	2520	2148	1683	-	-	-	-	-	-	-	-	-
		BHP	0.10	0.12	0.13	-	-	-	-	-	-	-	-	-
		Sones	5.7	4.6	4.1	-	-	-	-	-	-	-	-	-
1/4	550	CFM	2772	2440	2055	-	-	-	-	-	-	-	-	-
		BHP	0.13	0.15	0.17	-	-	-	-	-	-	-	-	-
		Sones	6.6	5.6	5.1	-	-	-	-	-	-	-	-	-
1/4	600	CFM	3024	2722	2392	1957	-	-	-	-	-	-	-	-
		BHP	0.17	0.19	0.22	0.23	-	-	-	-	-	-	-	-
		Sones	7.5	6.8	6.2	5.8	-	-	-	-	-	-	-	-
1/3	650	CFM	3276	2997	2698	2344	1804	-	-	-	-	-	-	-
		BHP	0.21	0.24	0.27	0.29	0.29	-	-	-	-	-	-	-
		Sones	8.5	7.9	7.3	6.8	6.5	-	-	-	-	-	-	-
1/2	700	CFM	3528	3268	2996	2702	2322	-	-	-	-	-	-	-
		BHP	0.27	0.30	0.32	0.35	0.36	-	-	-	-	-	-	-
		Sones	9.5	9.2	8.6	8.0	7.6	-	-	-	-	-	-	-
1/2	750	CFM	3780	3535	3290	3024	2702	2350	-	-	-	-	-	-
		BHP	0.33	0.36	0.39	0.42	0.44	0.45	-	-	-	-	-	-
		Sones	10.8	10.4	10.0	9.4	8.8	8.4	-	-	-	-	-	-
3/4	800	CFM	4032	3801	3578	3328	3063	2736	2291	-	-	-	-	-
		BHP	0.40	0.43	0.46	0.49	0.52	0.54	0.54	-	-	-	-	-
		Sones	12.2	11.9	11.5	10.8	10.2	9.7	9.3	-	-	-	-	-
3/4	850	CFM	4284	4065	3858	3625	3392	3107	2781	2098	-	-	-	-
		BHP	0.48	0.51	0.55	0.58	0.61	0.64	0.65	0.62	-	-	-	-
		Sones	13.5	13.2	13.0	12.3	11.7	11.1	10.6	10.2	-	-	-	-
3/4	900	CFM	4536	4329	4133	3921	3700	3463	3173	2862	-	-	-	-
		BHP	0.57	0.60	0.64	0.68	0.71	0.74	0.76	0.77	-	-	-	-
		Sones	14.6	14.4	14.1	13.6	13.0	12.4	11.9	11.4	-	-	-	-
1	950	CFM	4788	4592	4405	4211	3998	3790	3541	3264	2983	-	-	-
		BHP	0.66	0.71	0.74	0.78	0.82	0.85	0.88	0.90	0.91	-	-	-
		Sones	15.8	15.5	15.3	14.9	14.4	13.8	13.3	12.8	12.4	-	-	-
1	1000	CFM	5040	4853	4675	4496	4296	4099	3889	3633	3367	-	-	-
		BHP	0.78	0.82	0.86	0.90	0.94	0.98	1.01	1.04	1.05	-	-	-
		Sones	16.9	16.7	16.4	16.2	15.7	15.2	14.7	14.2	13.9	-	-	-
1-1/2	1050	CFM	5292	5114	4943	4775	4591	4398	4211	3994	3741	3219	-	-
		BHP	0.90	0.94	0.99	1.03	1.07	1.11	1.15	1.18	1.20	1.23	-	-
		Sones	18.1	17.9	17.6	17.4	17.0	16.6	16.2	15.7	15.3	14.6	-	-
1-1/2	1100	CFM	5544	5374	5209	5050	4880	4696	4518	4331	4110	3614	2294	-
		BHP	1.03	1.08	1.13	1.17	1.21	1.26	1.30	1.34	1.37	1.40	1.24	-
		Sones	19.3	19.0	18.8	18.7	18.4	17.9	17.5	17.2	16.8	16.1	15.4	-
2	1150	CFM	5796	5633	5474	5322	5165	4992	4817	4647	4459	4010	3524	-
		BHP	1.18	1.23	1.28	1.32	1.37	1.42	1.46	1.50	1.54	1.59	1.61	-
		Sones	20.5	20.3	20.1	19.9	19.7	19.3	19.0	18.6	18.3	17.7	17.0	-
2	1200	CFM	6048	5891	5738	5593	5445	5284	5115	4951	4784	4378	3915	2899
		BHP	1.34	1.39	1.44	1.49	1.54	1.59	1.63	1.68	1.72	1.79	1.82	1.73
		Sones	22.0	21.8	21.6	21.3	21.1	20.8	20.5	20.2	19.9	19.2	18.5	17.9
2	1250	CFM	6300	6150	6002	5861	5721	5572	5411	5249	5094	4738	4320	3888
		BHP	1.51	1.57	1.62	1.67	1.72	1.77	1.82	1.87	1.92	2.00	2.05	2.07
		Sones	23.5	23.3	23.1	22.9	22.7	22.4	22.1	21.8	21.5	20.8	20.2	19.5
2	1300	CFM	6552	6407	6265	6129	5994	5856	5704	5548	5396	5081	4688	4262
		BHP	1.70	1.76	1.81	1.87	1.92	1.97	2.03	2.08	2.12	2.22	2.28	2.32
		Sones	25.0	24.8	24.7	24.5	24.3	24.1	23.7	23.4	23.1	22.5	21.8	21.2

Power Ratings (BHP) does not include transmission losses.
Performance certified is for installation type A - free inlet, free outlet.
Performance ratings do not include the effects of birdscreen in the airstream.
The sound ratings shown are loudness values in fan sones @ 5' (1.5m) in a hemispherical free field calculated per AMCA Standard 301. Values shown are for: Installation Type A: free inlet hemispherical sone levels.

S&P USA Ventilation Systems, LLC., Div. of Soler & Palau Ventilation Group, certifies that the Models STXB shown herein are licensed to bear the AMCA Seal. The ratings shown are based on test and procedures performed in accordance with AMCA Publication 211 and AMCA Publication 311 and comply with the requirement of the AMCA Certified Ratings Program.

STANDARD 705 for Electrical
STANDARD 762 for Grease Removal

STXBe / STXBeRHUL - Size 20

Motor HP	RPM		Static Pressure (in. wg)											
			0.00	0.13	0.25	0.38	0.50	0.63	0.75	0.88	1.00	1.25	1.50	1.75
2 HP 1800 RPM	500	CFM	2376	1952	1444	-	-	-	-	-	-	-	-	-
		BHP	0.11	0.13	0.14	-	-	-	-	-	-	-	-	-
		SONES	7.4	5.7	5.0	-	-	-	-	-	-	-	-	-
	550	CFM	2613	2232	1813	-	-	-	-	-	-	-	-	-
		BHP	0.15	0.17	0.18	-	-	-	-	-	-	-	-	-
		SONES	8.6	7.0	6.3	-	-	-	-	-	-	-	-	-
	600	CFM	2851	2504	2130	1662	-	-	-	-	-	-	-	-
		BHP	0.19	0.21	0.23	0.24	-	-	-	-	-	-	-	-
		SONES	9.9	8.4	7.6	6.9	-	-	-	-	-	-	-	-
	650	CFM	3089	2771	2429	2056	-	-	-	-	-	-	-	-
		BHP	0.24	0.27	0.29	0.30	-	-	-	-	-	-	-	-
		SONES	11.3	9.8	8.9	8.3	-	-	-	-	-	-	-	-
	700	CFM	3326	3033	2719	2393	1982	-	-	-	-	-	-	-
		BHP	0.30	0.33	0.36	0.37	0.38	-	-	-	-	-	-	-
		SONES	12.6	11.1	10.2	9.5	9.0	-	-	-	-	-	-	-
	750	CFM	3564	3292	3002	2700	2371	1909	-	-	-	-	-	-
		BHP	0.37	0.40	0.43	0.45	0.46	0.46	-	-	-	-	-	-
		SONES	14.0	12.4	11.4	10.8	10.2	9.8	-	-	-	-	-	-
	800	CFM	3801	3549	3278	2997	2710	2360	-	-	-	-	-	-
		BHP	0.45	0.48	0.51	0.54	0.56	0.57	-	-	-	-	-	-
		SONES	15.4	13.8	12.8	12.1	11.6	11.1	-	-	-	-	-	-
	850	CFM	4039	3803	3549	3289	3021	2732	2366	-	-	-	-	-
		BHP	0.54	0.57	0.61	0.64	0.66	0.67	0.68	-	-	-	-	-
		SONES	16.9	15.4	14.3	13.6	13.0	12.5	12.1	-	-	-	-	-
	900	CFM	4277	4054	3816	3573	3320	3065	2768	2389	-	-	-	-
		BHP	0.64	0.68	0.72	0.75	0.78	0.79	0.80	0.80	-	-	-	-
		SONES	18.5	17.0	15.9	15.1	14.6	14.2	13.7	13.2	-	-	-	-
	950	CFM	4514	4304	4081	3851	3615	3376	3122	2819	2429	-	-	-
		BHP	0.75	0.79	0.83	0.87	0.90	0.92	0.94	0.95	0.93	-	-	-
		SONES	20.0	18.7	17.7	16.7	16.1	15.6	15.2	14.9	14.5	-	-	-
	1000	CFM	4752	4553	4342	4125	3903	3675	3447	3192	2888	-	-	-
		BHP	0.88	0.92	0.96	1.00	1.03	1.07	1.08	1.10	1.10	-	-	-
		SONES	21.5	20.3	19.4	18.5	17.8	17.4	17.0	16.5	16.1	-	-	-
	1050	CFM	4989	4800	4601	4396	4186	3971	3754	3531	3275	2582	-	-
		BHP	1.01	1.06	1.10	1.15	1.18	1.22	1.24	1.26	1.28	1.25	-	-
		SONES	23.2	22.1	21.1	20.2	19.5	19.0	18.6	18.3	17.9	17.1	-	-
	1100	CFM	5227	5047	4858	4663	4464	4261	4053	3847	3626	3075	-	-
		BHP	1.17	1.21	1.26	1.31	1.35	1.38	1.42	1.44	1.46	1.47	-	-
		SONES	24.8	23.8	22.9	22.1	21.2	20.7	20.3	19.9	19.6	18.9	-	-
	1150	CFM	5465	5293	5113	4927	4738	4545	4352	4151	3951	3483	2827	-
		BHP	1.33	1.38	1.43	1.48	1.52	1.56	1.60	1.63	1.65	1.68	1.64	-
		SONES	26.7	25.7	24.8	23.9	23.1	22.5	22.1	21.7	21.3	20.6	19.9	-
	1200	CFM	5702	5538	5367	5189	5008	4825	4639	4449	4260	3848	3324	-
		BHP	1.52	1.56	1.62	1.67	1.72	1.76	1.80	1.83	1.86	1.90	1.90	-
		SONES	28.5	27.6	26.7	25.9	25.0	24.3	23.9	23.5	23.2	22.5	21.8	-
	1250	CFM	5940	5782	5619	5449	5276	5102	4924	4743	4564	4188	3740	3141
		BHP	1.71	1.76	1.82	1.87	1.93	1.97	2.01	2.05	2.09	2.13	2.16	2.12
		SONES	30.4	29.5	28.7	27.8	27.0	26.3	25.7	25.3	24.9	24.3	23.7	23.1
	1300	CFM	6177	6026	5870	5708	5542	5374	5205	5032	4857	4506	4113	3625
		BHP	1.93	1.98	2.03	2.09	2.15	2.20	2.24	2.28	2.32	2.38	2.42	2.42
		SONES	32.6	31.6	30.7	29.9	29.0	28.3	27.7	27.2	26.8	26.2	25.6	25.0

Power Ratings (BHP) does not include transmission losses.
Performance certified is for installation type A - free inlet, free outlet.
Performance ratings do not include the effects of birdscreen in the airstream.
The sound ratings shown are loudness values in fan sones @ 5' (1.5m) in a hemispherical free field calculated per AMCA Standard 301.
Values shown are for: Installation Type A: free inlet hemispherical sone levels.

S&P USA Ventilation Systems, LLC., Div. of Soler & Palau Ventilation Group, certifies that the Models STXB shown herein are licensed to bear the AMCA Seal. The ratings shown are based on test and procedures performed in accordance with AMCA Publication 211 and AMCA Publication 311 and comply with the requirement of the AMCA Certified Ratings Program.

STANDARD 705 for Electrical
STANDARD 762 for Grease Removal

STXB - SIZE 20 High Pressure

Motor HP	RPM		Static Pressure in Inches w.g.												
			0.25	0.375	0.5	0.625	.75	0.875	1	1.25	1.5	1.75	2	2.25	2.5
1/2	650	CFM	2317	1965	1305	-	-	-	-	-	-	-	-	-	-
		BHP	0.19	0.21	0.21	-	-	-	-	-	-	-	-	-	-
		Sones	5.8	5.5	6.0	-	-	-	-	-	-	-	-	-	-
1/2	700	CFM	2578	2292	1877	-	-	-	-	-	-	-	-	-	-
		BHP	0.24	0.26	0.27	-	-	-	-	-	-	-	-	-	-
		Sones	6.7	6.3	6.5	-	-	-	-	-	-	-	-	-	-
1/2	750	CFM	2829	2585	2265	1772	-	-	-	-	-	-	-	-	-
		BHP	0.29	0.31	0.33	0.33	-	-	-	-	-	-	-	-	-
		Sones	7.7	7.3	7.0	7.6	-	-	-	-	-	-	-	-	-
1/2	800	CFM	3074	2859	2596	2241	1674	-	-	-	-	-	-	-	-
		BHP	0.34	0.36	0.39	0.40	0.39	-	-	-	-	-	-	-	-
		Sones	8.8	8.3	7.9	8.1	8.7	-	-	-	-	-	-	-	-
1/2	850	CFM	3315	3120	2894	2612	2236	1480	-	-	-	-	-	-	-
		BHP	0.40	0.42	0.45	0.47	0.48	0.44	-	-	-	-	-	-	-
		Sones	9.9	9.4	8.9	8.6	9.2	9.8	-	-	-	-	-	-	-
3/4	900	CFM	3552	3373	3174	2937	2640	2238	-	-	-	-	-	-	-
		BHP	0.46	0.50	0.52	0.55	0.57	0.57	-	-	-	-	-	-	-
		Sones	11.0	10.4	10.0	9.6	9.7	10.3	-	-	-	-	-	-	-
3/4	950	CFM	3787	3620	3440	3234	2988	2680	2253	-	-	-	-	-	-
		BHP	0.54	0.57	0.60	0.63	0.66	0.67	0.67	-	-	-	-	-	-
		Sones	12.1	11.6	11.2	10.7	10.3	10.8	11.4	-	-	-	-	-	-
3/4	1000	CFM	4020	3863	3698	3514	3303	3051	2736	-	-	-	-	-	-
		BHP	0.62	0.66	0.69	0.72	0.75	0.77	0.78	-	-	-	-	-	-
		Sones	13.5	12.8	12.3	11.9	11.5	11.3	11.9	-	-	-	-	-	-
1	1050	CFM	4251	4102	3949	3782	3596	3382	3127	2403	-	-	-	-	-
		BHP	0.70	0.75	0.78	0.81	0.85	0.88	0.90	0.89	-	-	-	-	-
		Sones	14.8	14.0	13.6	13.2	12.7	12.3	12.4	13.6	-	-	-	-	-
1	1100	CFM	4481	4340	4195	4042	3875	3686	3470	2910	-	-	-	-	-
		BHP	0.80	0.85	0.89	0.92	0.95	1.00	1.02	1.04	-	-	-	-	-
		Sones	16.2	15.3	14.8	14.4	14.0	13.7	13.3	14.1	-	-	-	-	-

Power Ratings (BHP) does not include transmission losses.
Performance certified is for installation type A - free inlet, free outlet.
Performance ratings do not include the effects of birdscreen in the airstream.
The sound ratings shown are loudness values in fan sones @ 5′ (1.5m) in a hemispherical free field calculated per AMCA Standard 301.
Values shown are for: Installation Type A: free inlet hemispherical sone levels.

S&P USA Ventilation Systems, LLC., Div. of Soler & Palau Ventilation Group, certifies that the Models STXB shown herein are licensed to bear the AMCA Seal. The ratings shown are based on test and procedures performed in accordance with AMCA Publication 211 and AMCA Publication 311 and comply with the requirement of the AMCA Certified Ratings Program.

STANDARD 705 for Electrical
STANDARD 762 for Grease Removal

STXB - SIZE 20 High Pressure (Con't)

Motor HP	RPM		Static Pressure in Inches w.g.												
			0.25	0.375	0.5	0.625	.75	0.875	1	1.25	1.5	1.75	2	2.25	2.5
1-1/2	1150	CFM	4709	4575	4438	4295	4142	3974	3785	3318	2630	-	-	-	-
		BHP	0.91	0.96	1.00	1.04	1.07	1.11	1.15	1.19	1.17	-	-	-	-
		Sones	17.5	16.5	16.1	15.7	15.3	14.9	14.5	14.7	15.7	-	-	-	-
1-1/2	1200	CFM	4937	4808	4678	4544	4402	4249	4081	3679	3143	-	-	-	-
		BHP	1.02	1.07	1.13	1.16	1.20	1.23	1.28	1.33	1.35	-	-	-	-
		Sones	18.9	17.9	17.4	17.0	16.6	16.2	15.8	15.3	16.3	-	-	-	-
1-1/2	1250	CFM	5164	5040	4916	4788	4656	4515	4363	4010	3558	2920	-	-	-
		BHP	1.14	1.20	1.25	1.30	1.33	1.37	1.41	1.49	1.52	1.51	-	-	-
		Sones	20.2	19.2	18.8	18.4	18.0	17.5	17.2	16.5	17.0	18.0	-	-	-
2	1300	CFM	5390	5271	5152	5030	4906	4775	4635	4318	3930	3429	2610	-	-
		BHP	1.28	1.33	1.39	1.45	1.48	1.52	1.56	1.65	1.70	1.72	1.65	-	-
		Sones	21.6	20.6	20.1	19.7	19.3	19.0	18.6	17.9	17.6	18.5	19.5	-	-
2	1350	CFM	5615	5500	5386	5270	5151	5029	4899	4611	4269	3842	3264	-	-
		BHP	1.42	1.48	1.54	1.60	1.64	1.68	1.72	1.81	1.89	1.92	1.91	-	-
		Sones	23.0	22.0	21.5	21.1	20.7	20.3	19.9	19.3	18.6	19.2	20.1	-	-
2	1400	CFM	5840	5729	5619	5507	5394	5278	5157	4892	4585	4215	3754	3120	-
		BHP	1.58	1.64	1.70	1.76	1.82	1.86	1.89	1.98	2.08	2.13	2.15	2.11	-
		Sones	24.3	23.4	22.9	22.5	22.1	21.7	21.4	20.7	20.0	19.9	20.8	21.7	-
3	1450	CFM	6064	5957	5851	5743	5635	5524	5410	5164	4883	4557	4160	3661	2844
		BHP	1.75	1.80	1.87	1.93	1.99	2.04	2.08	2.16	2.27	2.34	2.38	2.38	2.27
		Sones	25.7	24.8	24.4	23.9	23.6	23.2	22.8	22.1	21.4	20.8	21.4	22.3	23.2
3	1500	CFM	6288	6184	6081	5978	5873	5767	5659	5428	5171	4877	4530	4103	3544
		BHP	1.93	1.98	2.05	2.12	2.18	2.24	2.28	2.36	2.47	2.56	2.61	2.64	2.62
		Sones	27.1	26.4	25.9	25.5	25.0	24.7	24.3	23.6	22.9	22.3	22.2	23.0	23.9
3	1550	CFM	6511	6411	6311	6211	6111	6008	5905	5687	5449	5179	4871	4505	4065
		BHP	2.12	2.18	2.24	2.31	2.38	2.45	2.49	2.57	2.68	2.79	2.86	2.90	2.91
		Sones	28.5	27.9	27.4	27.0	26.5	26.1	25.8	25.1	24.4	23.8	23.2	23.8	24.6
3	1600	CFM	6734	6637	6540	6443	6346	6248	6148	5942	5718	5471	5191	4868	4483
		BHP	2.32	2.38	2.45	2.52	2.59	2.66	2.72	2.81	2.90	3.02	3.11	3.17	3.20
		Sones	30.4	29.5	29.0	28.5	28.1	27.7	27.3	26.6	25.9	25.3	24.7	24.5	25.3

Power Ratings (BHP) does not include transmission losses.
Performance certified is for installation type A - free inlet, free outlet.
Performance ratings do not include the effects of birdscreen in the airstream.
The sound ratings shown are loudness values in fan sones @ 5' (1.5m) in a hemispherical free field calculated per AMCA Standard 301.
Values shown are for: Installation Type A: free inlet hemispherical sone levels.

S&P USA Ventilation Systems, LLC., Div. of Soler & Palau Ventilation Group, certifies that the Models STXB shown herein are licensed to bear the AMCA Seal. The ratings shown are based on test and procedures performed in accordance with AMCA Publication 211 and AMCA Publication 311 and comply with the requirement of the AMCA Certified Ratings Program.

STANDARD 705 for Electrical
STANDARD 762 for Grease Removal

STXB - SIZE 22

Motor HP	RPM		Static Pressure in Inches w.g.									
			0	0.125	0.25	0.375	0.5	0.625	0.75	0.875	1	1.25
1/4	400	CFM	3285	2531	-	-	-	-	-	-	-	-
		BHP	0.10	0.12	-	-	-	-	-	-	-	-
		Sones	4.9	4.1	-	-	-	-	-	-	-	-
1/4	450	CFM	3696	3041	-	-	-	-	-	-	-	-
		BHP	0.15	0.17	-	-	-	-	-	-	-	-
		Sones	6.3	5.5	-	-	-	-	-	-	-	-
1/4	500	CFM	4106	3529	2816	-	-	-	-	-	-	-
		BHP	0.20	0.23	0.25	-	-	-	-	-	-	-
		Sones	7.8	7.0	6.3	-	-	-	-	-	-	-
1/3	550	CFM	4517	4003	3408	-	-	-	-	-	-	-
		BHP	0.27	0.30	0.32	-	-	-	-	-	-	-
		Sones	9.0	8.3	7.6	-	-	-	-	-	-	-
1/2	600	CFM	4928	4462	3937	3285	-	-	-	-	-	-
		BHP	0.35	0.38	0.41	0.43	-	-	-	-	-	-
		Sones	10.3	9.6	9.0	8.4	-	-	-	-	-	-
3/4	650	CFM	5338	4910	4434	3905	3355	-	-	-	-	-
		BHP	0.45	0.48	0.52	0.54	0.54	-	-	-	-	-
		Sones	11.7	11.0	10.3	9.7	9.3	-	-	-	-	-
3/4	700	CFM	5749	5351	4922	4461	3890	-	-	-	-	-
		BHP	0.56	0.60	0.64	0.66	0.68	-	-	-	-	-
		Sones	13.0	12.4	11.8	11.2	10.8	-	-	-	-	-
1	750	CFM	6160	5787	5400	4975	4503	3919	-	-	-	-
		BHP	0.69	0.73	0.77	0.80	0.82	0.83	-	-	-	-
		Sones	14.5	14.0	13.5	13.0	12.5	12.0	-	-	-	-
1	800	CFM	6570	6221	5868	5469	5063	4570	-	-	-	-
		BHP	0.84	0.88	0.92	0.97	0.99	1.01	-	-	-	-
		Sones	16.4	15.8	15.3	14.7	14.2	13.8	-	-	-	-
1-1/2	850	CFM	6981	6652	6323	5957	5583	5167	4666	-	-	-
		BHP	1.01	1.05	1.09	1.14	1.17	1.20	1.21	-	-	-
		Sones	18.1	17.6	17.1	16.6	16.2	15.7	15.3	-	-	-
1-1/2	900	CFM	7392	7081	6772	6438	6082	5720	5294	4782	-	-
		BHP	1.19	1.24	1.28	1.33	1.38	1.41	1.43	1.43	-	-
		Sones	20.0	19.4	18.9	18.5	18.0	17.6	17.2	16.8	-	-
2	950	CFM	7802	7508	7216	6909	6571	6239	5874	5449	4950	-
		BHP	1.41	1.45	1.50	1.55	1.61	1.64	1.66	1.68	1.68	-
		Sones	21.9	21.4	20.9	20.4	19.9	19.5	19.1	18.7	18.4	-
2	1000	CFM	8213	7933	7655	7372	7058	6739	6415	6048	5631	3656
		BHP	1.64	1.69	1.74	1.79	1.85	1.90	1.92	1.95	1.97	1.69
		Sones	24.0	23.5	23.0	22.6	22.1	21.7	21.2	20.8	20.4	19.6
2	1050	CFM	8624	8357	8092	7825	7536	7228	6929	6608	6242	5569
		BHP	1.90	1.95	2.00	2.05	2.11	2.18	2.21	2.24	2.26	2.28
		Sones	25.7	25.2	24.8	24.3	23.9	23.5	23.1	22.7	22.3	21.6

Power Ratings (BHP) does not include transmission losses.
Performance certified is for installation type A - free inlet, free outlet.
Performance ratings do not include the effects of birdscreen in the airstream.
The sound ratings shown are loudness values in fan sones @ 5' (1.5m) in a hemispherical free field calculated per AMCA Standard 301. Values shown are for: Installation Type A: free inlet hemispherical sone levels.

S&P USA Ventilation Systems, LLC., Div. of Soler & Palau Ventilation Group, certifies that the Models STXB shown herein are licensed to bear the AMCA Seal. The ratings shown are based on test and procedures performed in accordance with AMCA Publication 211 and AMCA Publication 311 and comply with the requirement of the AMCA Certified Ratings Program.

STANDARD 705 for Electrical
STANDARD 762 for Grease Removal

STXB - SIZE 22 High Pressure

Motor HP	RPM		Static Pressure in Inches w.g.									
			0.25	0.375	0.5	0.625	0.75	.875	1	1.25	1.5	1.75
1/2	550	CFM	2785	2079	-	-	-	-	-	-	-	-
		BHP	0.23	0.23	-	-	-	-	-	-	-	-
		Sones	7.0	6.2	-	-	-	-	-	-	-	-
1/2	600	CFM	3214	2679	-	-	-	-	-	-	-	-
		BHP	0.30	0.31	-	-	-	-	-	-	-	-
		Sones	8.2	7.6	-	-	-	-	-	-	-	-
1/2	650	CFM	3621	3195	2553	-	-	-	-	-	-	-
		BHP	0.37	0.39	0.39	-	-	-	-	-	-	-
		Sones	9.5	9.0	8.3	-	-	-	-	-	-	-
1/2	700	CFM	4019	3642	3175	-	-	-	-	-	-	-
		BHP	0.45	0.48	0.49	-	-	-	-	-	-	-
		Sones	10.9	10.5	9.9	-	-	-	-	-	-	-
3/4	750	CFM	4406	4062	3685	3155	1656	-	-	-	-	-
		BHP	0.54	0.57	0.60	0.60	0.49	-	-	-	-	-
		Sones	12.5	12.0	11.5	10.9	10.2	-	-	-	-	-
3/4	800	CFM	4782	4466	4133	3737	3186	-	-	-	-	-
		BHP	0.64	0.68	0.71	0.73	0.73	-	-	-	-	-
		Sones	14.2	13.7	13.2	12.8	12.0	-	-	-	-	-
1	850	CFM	5147	4865	4558	4226	3806	3206	-	-	-	-
		BHP	0.76	0.80	0.84	0.87	0.88	0.86	-	-	-	-
		Sones	16.0	15.5	15.0	14.5	13.9	13.2	-	-	-	-
1	900	CFM	5507	5254	4966	4670	4334	3894	3341	-	-	-
		BHP	0.90	0.94	0.98	1.01	1.04	1.04	1.02	-	-	-
		Sones	17.8	17.4	16.9	16.4	15.9	15.2	14.5	-	-	-
1-1/2	950	CFM	5863	5635	5367	5093	4801	4458	4008	-	-	-
		BHP	1.04	1.09	1.13	1.17	1.20	1.22	1.23	-	-	-
		Sones	19.7	19.2	18.7	18.1	17.7	17.2	16.6	-	-	-
1-1/2	1000	CFM	6216	6005	5762	5502	5237	4948	4601	-	-	-
		BHP	1.21	1.25	1.30	1.35	1.39	1.41	1.43	-	-	-
		Sones	21.7	21.2	20.7	20.2	19.7	19.2	18.7	-	-	-
2	1050	CFM	6567	6369	6149	5904	5656	5396	5109	4339	-	-
		BHP	1.39	1.44	1.49	1.54	1.58	1.62	1.64	1.66	-	-
		Sones	23.2	22.8	22.3	21.8	21.3	20.8	20.4	19.2	-	-
2	1100	CFM	6917	6728	6529	6301	6064	5825	5571	4944	-	-
		BHP	1.58	1.64	1.69	1.74	1.79	1.84	1.87	1.91	-	-
		Sones	24.7	24.3	23.8	23.4	22.9	22.4	22.0	21.0	-	-
3	1150	CFM	7265	7085	6899	6691	6466	6240	6007	5477	4751	-
		BHP	1.80	1.85	1.91	1.96	2.02	2.07	2.11	2.16	2.17	-
		Sones	26.2	25.8	25.4	25.0	24.6	24.1	23.6	22.8	21.7	-
3	1200	CFM	7612	7439	7264	7074	6863	6645	6428	5958	5358	4493
		BHP	2.03	2.09	2.15	2.21	2.27	2.32	2.37	2.44	2.48	2.43
		Sones	27.8	27.4	27.0	26.6	26.2	25.7	25.3	24.5	23.6	22.4
3	1250	CFM	7959	7791	7625	7450	7254	7047	6839	6406	5900	5222
		BHP	2.28	2.35	2.41	2.47	2.53	2.59	2.64	2.73	2.78	2.80
		Sones	29.5	29.1	28.6	28.2	27.8	27.4	27.0	26.2	25.4	24.3
3	1300	CFM	8304	8141	7982	7818	7639	7443	7241	6837	6391	5832
		BHP	2.56	2.62	2.69	2.75	2.81	2.88	2.94	3.04	3.11	3.15
		Sones	31.2	30.8	30.4	30.0	29.6	29.1	28.7	27.9	27.2	26.3
3	1350	CFM	8648	8490	8338	8182	8018	7834	7642	7256	6847	6371
		BHP	2.85	2.92	2.99	3.05	3.12	3.19	3.25	3.37	3.45	3.51
		Sones	33.0	32.6	32.2	31.8	31.4	30.9	30.5	29.7	28.9	28.2

Power Ratings (BHP) does not include transmission losses.
Performance certified is for installation type A - free inlet, free outlet.
Performance ratings do not include the effects of birdscreen in the airstream.
The sound ratings shown are loudness values in fan sones @ 5' (1.5m) in a hemispherical free field calculated per AMCA Standard 301. Values shown are for: Installation Type A: free inlet hemispherical sone levels.

S&P USA Ventilation Systems, LLC., Div. of Soler & Palau Ventilation Group, certifies that the Models STXB shown herein are licensed to bear the AMCA Seal. The ratings shown are based on test and procedures performed in accordance with AMCA Publication 211 and AMCA Publication 311 and comply with the requirement of the AMCA Certified Ratings Program.

STANDARD 705 for Electrical
STANDARD 762 for Grease Removal

STXB - SIZE 24

Motor HP	RPM		Static Pressure in Inches w.g.								
			0	0.125	0.25	0.375	0.5	0.625	0.75	0.875	1
1/4	350	CFM	3397	2609	-	-	-	-	-	-	-
		BHP	0.11	0.13	-	-	-	-	-	-	-
		Sones	4.9	4.4	-	-	-	-	-	-	-
1/4	400	CFM	3883	3236	-	-	-	-	-	-	-
		BHP	0.16	0.18	-	-	-	-	-	-	-
		Sones	6.1	5.6	-	-	-	-	-	-	-
1/4	450	CFM	4368	3818	3067	-	-	-	-	-	-
		BHP	0.23	0.26	0.27	-	-	-	-	-	-
		Sones	7.4	6.9	6.4	-	-	-	-	-	-
1/3	500	CFM	4853	4373	3755	-	-	-	-	-	-
		BHP	0.32	0.35	0.37	-	-	-	-	-	-
		Sones	8.9	8.4	7.9	-	-	-	-	-	-
1/2	550	CFM	5339	4906	4386	3739	-	-	-	-	-
		BHP	0.42	0.46	0.48	0.49	-	-	-	-	-
		Sones	11.1	10.6	10.2	9.5	-	-	-	-	-
3/4	600	CFM	5824	5428	4982	4436	-	-	-	-	-
		BHP	0.55	0.59	0.62	0.63	-	-	-	-	-
		Sones	13.6	13.0	12.6	12.3	-	-	-	-	-
3/4	650	CFM	6309	5943	5553	5080	4533	-	-	-	-
		BHP	0.70	0.74	0.78	0.80	0.81	-	-	-	-
		Sones	16.1	15.5	15.0	14.8	14.3	-	-	-	-
1	700	CFM	6795	6453	6107	5690	5217	4679	-	-	-
		BHP	0.87	0.91	0.96	0.99	1.01	1.01	-	-	-
		Sones	18.5	17.9	17.3	17.1	16.9	15.9	-	-	-
1-1/2	750	CFM	7280	6961	6644	6277	5859	5394	-	-	-
		BHP	1.07	1.11	1.17	1.20	1.23	1.24	-	-	-
		Sones	20.2	19.7	19.1	18.8	18.6	18.4	-	-	-
1-1/2	800	CFM	7765	7467	7171	6845	6471	6060	5608	-	-
		BHP	1.30	1.34	1.40	1.45	1.47	1.50	1.51	-	-
		Sones	22.0	21.5	21.0	20.6	20.4	20.2	19.7	-	-
2	850	CFM	8251	7970	7691	7399	7062	6693	6293	5855	-
		BHP	1.56	1.61	1.66	1.72	1.75	1.78	1.80	1.81	-
		Sones	23.9	23.3	22.8	22.3	22.1	21.9	21.8	21.1	-
2	900	CFM	8736	8471	8207	7939	7637	7302	6941	6554	6133
		BHP	1.85	1.90	1.96	2.03	2.07	2.10	2.13	2.14	2.14
		Sones	25.9	25.3	24.8	24.3	24.0	23.8	23.6	23.4	22.5

Power Ratings (BHP) does not include transmission losses.
Performance certified is for installation type A - free inlet, free outlet.
Performance ratings do not include the effects of birdscreen in the airstream.
The sound ratings shown are loudness values in fan sones @ 5' (1.5m) in a hemispherical free field calculated per AMCA Standard 301. Values shown are for: Installation Type A: free inlet hemispherical sone levels.

S&P USA Ventilation Systems, LLC., Div. of Soler & Palau Ventilation Group, certifies that the Models STXB shown herein are licensed to bear the AMCA Seal. The ratings shown are based on test and procedures performed in accordance with AMCA Publication 211 and AMCA Publication 311 and comply with the requirement of the AMCA Certified Ratings Program.

STANDARD 705 for Electrical
STANDARD 762 for Grease Removal

STXBe/STXBeRHUL - Size 24 (Part 1 of 2)

Motor HP		RPM		Static Pressure (in. wg)								
				0.00	0.13	0.25	0.38	0.50	0.63	0.75	0.88	1.00
2HP 1800 RPM		350	CFM	3353	2540	-	-	-	-	-	-	-
			BHP	0.12	0.15	-	-	-	-	-	-	-
			SONES	5.1	5.7	-	-	-	-	-	-	-
		400	CFM	3832	3157	2168	-	-	-	-	-	-
			BHP	0.19	0.21	0.21	-	-	-	-	-	-
			SONES	6.7	10.6	5.5	-	-	-	-	-	-
		450	CFM	4311	3733	2987	-	-	-	-	-	-
			BHP	0.26	0.30	0.31	-	-	-	-	-	-
			SONES	7.9	10.0	8.6	-	-	-	-	-	-
		500	CFM	4790	4284	3657	2847	-	-	-	-	-
			BHP	0.36	0.40	0.43	0.42	-	-	-	-	-
			SONES	9.3	8.9	11.7	8.0	-	-	-	-	-
		550	CFM	5269	4822	4277	3642	2721	-	-	-	-
			BHP	0.48	0.52	0.56	0.57	0.54	-	-	-	-
			SONES	11.3	10.8	14.2	10.7	8.8	-	-	-	-
		600	CFM	5748	5347	4866	4320	3673	2613	-	-	-
			BHP	0.63	0.67	0.71	0.74	0.74	0.65	-	-	-
			SONES	13.5	13.0	15.4	13.4	11.3	10.3	-	-	-
	5HP 1800 RPM	650	CFM	6227	5864	5432	4950	4417	3756	2575	-	-
			BHP	0.80	0.85	0.89	0.93	0.94	0.93	0.79	-	-
			SONES	15.8	15.2	15.6	17.6	14.8	12.6	11.6	-	-
		700	CFM	6706	6373	5982	5554	5081	4555	3949	2685	-
			BHP	0.99	1.05	1.10	1.14	1.17	1.18	1.15	0.97	-
			SONES	18.2	17.5	17.3	23.4	19.3	16.3	14.1	13.0	-
		750	CFM	7185	6878	6522	6133	5710	5254	4737	4090	2948
			BHP	1.22	1.28	1.34	1.39	1.42	1.45	1.45	1.41	1.21
			SONES	20.8	20.1	19.4	25.1	25.7	21.2	17.9	16.0	14.8
		800	CFM	7664	7378	7054	6696	6314	5902	5463	4958	4337
			BHP	1.48	1.54	1.61	1.66	1.71	1.74	1.76	1.75	1.70
			SONES	22.6	22.0	21.3	23.1	35.2	28.2	23.2	19.7	17.4
		850	CFM	8143	7876	7577	7246	6898	6524	6128	5704	5217
			BHP	1.78	1.84	1.91	1.97	2.03	2.07	2.10	2.11	2.10
			SONES	24.4	23.8	23.2	23.5	40.6	38.8	31.0	25.6	21.7
		875	CFM	8383	8123	7837	7518	7185	6827	6448	6050	5606
			BHP	1.94	2.01	2.07	2.14	2.20	2.24	2.28	2.30	2.30
			SONES	25.4	24.7	24.1	24.0	36.5	46.0	36.3	29.5	24.6

Power Ratings (BHP) does not include transmission losses.
Performance certified is for installation type A - free inlet, free outlet.
Performance ratings do not include the effects of birdscreen in the airstream.
The sound ratings shown are loudness values in fan sones @ 5' (1.5m) in a hemispherical free field calculated per AMCA Standard 301. Values shown are for: Installation Type A: free inlet hemispherical sone levels.

S&P USA Ventilation Systems, LLC., Div. of Soler & Palau Ventilation Group, certifies that the Models STXB shown herein are licensed to bear the AMCA Seal. The ratings shown are based on test and procedures performed in accordance with AMCA Publication 211 and AMCA Publication 311 and comply with the requirement of the AMCA Certified Ratings Program.

STANDARD 705 for Electrical
STANDARD 762 for Grease Removal

STXBe / STXBeRHUL - Size 24 (Part 2 of 2)

Motor HP		RPM		Static Pressure (in. wg)								
				0.00	0.13	0.25	0.38	0.50	0.63	0.75	0.88	1.00
	5HP 1800 RPM	900	CFM	8669	8416	8146	7855	7549	7225	6869	6486	6075
			BHP	1.99	2.06	2.13	2.20	2.26	2.30	2.34	2.37	2.38
			SONES	23.3	23.0	22.7	22.5	22.0	21.4	20.9	20.5	20.0
		925	CFM	8909	8664	8403	8123	7827	7517	7180	6816	6427
			BHP	2.17	2.24	2.31	2.38	2.44	2.49	2.53	2.56	2.58
			SONES	24.5	24.1	23.8	23.7	23.2	22.7	22.2	21.7	21.2
		950	CFM	9150	8912	8659	8457	8103	7805	7485	7139	6770
			BHP	2.35	2.42	2.49	2.54	2.63	2.68	2.73	2.76	2.79
			SONES	25.7	25.4	25.1	25.0	24.6	24.0	23.5	23.0	22.5
		975	CFM	9391	9159	8914	8652	8376	8089	7784	7455	7104
			BHP	2.54	2.61	2.69	2.76	2.83	2.88	2.94	2.97	3.00
			SONES	27.1	26.8	26.5	26.3	26.0	25.4	24.9	24.3	23.8
		1000	CFM	9632	9406	9168	8915	8648	8371	8079	7766	7431
			BHP	2.74	2.81	2.89	2.96	3.03	3.10	3.15	3.20	3.23
			SONES	28.5	28.2	27.9	27.8	27.5	26.9	26.3	25.8	25.2
		1025	CFM	9873	9652	9421	9176	8926	8649	8378	8071	7752
			BHP	2.95	3.03	3.11	3.18	3.25	3.32	3.38	3.43	3.46
			SONES	29.9	29.6	29.4	29.2	29.1	28.5	27.9	27.4	26.8
		1050	CFM	10113	9899	9674	9436	9186	8926	8656	8371	8067
			BHP	3.17	3.25	3.33	3.41	3.48	3.55	3.61	3.67	3.71
			SONES	31.4	31.1	30.8	30.6	30.6	30.1	29.5	28.9	28.4
		1075	CFM	10354	10145	9926	9695	9453	9200	8940	8667	8375
			BHP	3.40	3.48	3.57	3.65	3.72	3.80	3.86	3.92	3.97
			SONES	33.0	32.7	32.4	32.2	32.2	31.7	31.1	30.5	30.0
		1100	CFM	10595	10390	10178	9953	9718	9472	9221	8958	8679
			BHP	3.64	3.73	3.81	3.90	3.98	4.05	4.12	4.18	4.23
			SONES	34.6	34.3	34.0	33.8	33.8	33.4	32.8	32.2	31.6
		1125	CFM	10836	10636	10428	10211	9982	9744	9500	9245	8979
			BHP	3.90	3.98	4.07	4.16	4.24	4.32	4.39	4.45	4.51
			SONES	36.2	35.9	35.7	35.4	35.4	35.2	34.6	34.0	33.4

Power Ratings (BHP) does not include transmission losses.
Performance certified is for installation type A - free inlet, free outlet.
Performance ratings do not include the effects of birdscreen in the airstream.
The sound ratings shown are loudness values in fan sones @ 5' (1.5m) in a hemispherical free field calculated per AMCA Standard 301. Values shown are for: Installation Type A: free inlet hemispherical sone levels.

S&P USA Ventilation Systems, LLC., Div. of Soler & Palau Ventilation Group, certifies that the Models STXB shown herein are licensed to bear the AMCA Seal. The ratings shown are based on test and procedures performed in accordance with AMCA Publication 211 and AMCA Publication 311 and comply with the requirement of the AMCA Certified Ratings Program.

STANDARD 705 for Electrical
STANDARD 762 for Grease Removal

STXB - SIZE 24 HIGH PRESSURE

Motor HP	RPM		Static Pressure in Inches w.g.							
			0.5	0.625	0.75	1	1.25	1.5	1.75	2
1/2	600	CFM	3030	-	-	-	-	-	-	-
		BHP	0.44	-	-	-	-	-	-	-
		Sones	9.9	-	-	-	-	-	-	-
3/4	650	CFM	3706	3085	-	-	-	-	-	-
		BHP	0.55	0.56	-	-	-	-	-	-
		Sones	11.8	12.1	-	-	-	-	-	-
3/4	700	CFM	4266	3801	3203	-	-	-	-	-
		BHP	0.67	0.69	0.70	-	-	-	-	-
		Sones	14.2	13.2	14.0	-	-	-	-	-
1	750	CFM	4756	4419	3931	-	-	-	-	-
		BHP	0.79	0.83	0.85	-	-	-	-	-
		Sones	16.1	15.1	14.7	-	-	-	-	-
1	800	CFM	5226	4945	4587	3563	-	-	-	-
		BHP	0.94	0.98	1.02	1.04	-	-	-	-
		Sones	18.2	17.1	16.2	16.7	-	-	-	-
1-1/2	850	CFM	5688	5425	5150	4307	-	-	-	-
		BHP	1.09	1.15	1.20	1.25	-	-	-	-
		Sones	20.2	19.2	18.3	17.5	-	-	-	-
1-1/2	900	CFM	6138	5895	5648	5000	4077	-	-	-
		BHP	1.27	1.33	1.39	1.46	1.48	-	-	-
		Sones	22.4	21.4	20.4	18.7	19.6	-	-	-
2	950	CFM	6575	6357	6119	5604	4811	-	-	-
		BHP	1.46	1.53	1.59	1.69	1.74	-	-	-
		Sones	24.1	23.3	22.4	20.8	20.4	-	-	-
2	1,000	CFM	6999	6807	6590	6136	5509	4681	-	-
		BHP	1.67	1.74	1.81	1.93	2.01	2.03	-	-
		Sones	25.8	25.3	24.5	22.9	21.4	22.4	-	-
3	1,050	CFM	7417	7247	7048	6625	6126	5407	-	-
		BHP	1.90	1.97	2.05	2.19	2.29	2.35	-	-
		Sones	27.4	27.3	26.5	25.1	23.9	23.6	-	-
3	1,100	CFM	7830	7673	7497	7095	6676	6094	5330	-
		BHP	2.15	2.23	2.31	2.47	2.59	2.67	2.71	-
		Sones	30.0	29.9	29.5	28.0	26.6	25.4	26.1	-
3	1,150	CFM	8240	8093	7936	7565	7177	6708	6067	5336
		BHP	2.43	2.51	2.59	2.76	2.90	3.01	3.08	3.09
		Sones	33.1	33.0	32.9	31.3	29.8	28.3	27.7	28.9

Power Ratings (BHP) does not include transmission losses.
Performance certified is for installation type A - free inlet, free outlet.
Performance ratings do not include the effects of birdscreen in the airstream.
The sound ratings shown are loudness values in fan sones @ 5' (1.5m) in a hemispherical free field calculated per AMCA Standard 301. Values shown are for: Installation Type A: free inlet hemispherical sone levels.

S&P USA Ventilation Systems, LLC., Div. of Soler & Palau Ventilation Group, certifies that the Models STXB shown herein are licensed to bear the AMCA Seal. The ratings shown are based on test and procedures performed in accordance with AMCA Publication 211 and AMCA Publication 311 and comply with the requirement of the AMCA Certified Ratings Program.

STANDARD 705 for Electrical
STANDARD 762 for Grease Removal

STXB - SIZE 27

Motor HP	RPM		Static Pressure in Inches w.g.							
			0	0.125	0.25	0.375	0.5	0.625	0.75	0.875
1/4	300	CFM	4483	3272	-	-	-	-	-	-
		BHP	0.12	0.14	-	-	-	-	-	-
		Sones	4.1	3.3	-	-	-	-	-	-
1/4	350	CFM	5230	4269	3155	-	-	-	-	-
		BHP	0.19	0.22	0.23	-	-	-	-	-
		Sones	5.7	4.9	4.1	-	-	-	-	-
1/3	400	CFM	5977	5187	4097	-	-	-	-	-
		BHP	0.29	0.32	0.34	-	-	-	-	-
		Sones	7.4	6.6	6.0	-	-	-	-	-
1/2	450	CFM	6724	6043	5150	4048	-	-	-	-
		BHP	0.41	0.45	0.48	0.49	-	-	-	-
		Sones	9.2	8.5	7.8	7.2	-	-	-	-
3/4	500	CFM	7471	6862	6134	5246	-	-	-	-
		BHP	0.56	0.61	0.65	0.67	-	-	-	-
		Sones	11.2	10.5	9.8	9.2	-	-	-	-
1	550	CFM	8219	7663	7058	6284	5423	-	-	-
		BHP	0.74	0.80	0.85	0.88	0.89	-	-	-
		Sones	13.4	12.7	12.1	11.4	10.8	-	-	-
1	600	CFM	8966	8454	7931	7274	6543	-	-	-
		BHP	0.97	1.02	1.08	1.13	1.16	-	-	-
		Sones	15.6	15.0	14.4	13.8	13.2	-	-	-
1-1/2	650	CFM	9713	9239	8771	8218	7552	6871	-	-
		BHP	1.23	1.29	1.35	1.41	1.45	1.48	-	-
		Sones	17.8	17.3	16.7	16.2	15.6	15.1	-	-
2	700	CFM	10460	10020	9589	9111	8538	7912	7259	-
		BHP	1.53	1.60	1.67	1.73	1.79	1.83	1.85	-
		Sones	20.1	19.5	19.0	18.5	17.9	17.4	16.9	-
2	750	CFM	11207	10796	10394	9972	9479	8908	8327	7703
		BHP	1.89	1.96	2.03	2.10	2.17	2.22	2.26	2.27
		Sones	22.1	21.5	21.0	20.5	20.0	19.5	19.1	18.6

Power Ratings (BHP) does not include transmission losses.
Performance certified is for installation type A - free inlet, free outlet.
Performance ratings do not include the effects of birdscreen in the airstream.
The sound ratings shown are loudness values in fan sones @ 5' (1.5m) in a hemisphe field calculated per AMCA Standard 301. Values shown are for: Installation Type A: hemispherical sone levels.

S&P USA Ventilation Systems, LLC., Div. of Soler & Palau Ventilation Group, certifies that the Models STXB shown herein are licensed to bear the AMCA Seal. The ratings shown are based on test and procedures performed in accordance with AMCA Publication 211 and AMCA Publication 311 and comply with the requirement of the AMCA Certified Ratings Program.

STANDARD 705 for Electrical
STANDARD 762 for Grease Removal

STXB - SIZE 27 HIGH PRESSURE

Motor HP	RPM		Static Pressure in Inches w.g.						
			0.5	0.625	0.75	1	1.25	1.5	1.75
1/2	500	CFM	5052	-	-	-	-	-	-
		BHP	0.47	-	-	-	-	-	-
		Sones	7.2	-	-	-	-	-	-
3/4	550	CFM	5427	-	-	-	-	-	-
		BHP	0.63	-	-	-	-	-	-
		Sones	9.6	-	-	-	-	-	-
1	600	CFM	6491	5737	-	-	-	-	-
		BHP	0.79	0.82	-	-	-	-	-
		Sones	12.0	11.1	-	-	-	-	-
1	650	CFM	7453	6821	6114	-	-	-	-
		BHP	0.98	1.02	1.05	-	-	-	-
		Sones	14.3	13.8	12.8	-	-	-	-
1-1/2	700	CFM	8331	7836	7212	6342	-	-	-
		BHP	1.18	1.24	1.28	1.31	-	-	-
		Sones	16.4	15.9	15.5	13.2	-	-	-
1-1/2	750	CFM	9163	8750	8258	7047	-	-	-
		BHP	1.41	1.48	1.54	1.61	-	-	-
		Sones	18.3	17.8	17.3	15.9	-	-	-
2	800	CFM	9969	9608	9199	8146	8316	-	-
		BHP	1.66	1.75	1.82	1.92	1.90	-	-
		Sones	20.2	19.7	19.3	18.5	16.6	-	-
2	850	CFM	10759	10431	10078	9210	8147	-	-
		BHP	1.95	2.04	2.12	2.25	2.33	-	-
		Sones	21.8	21.4	21.0	20.3	19.2	-	-
2	900	CFM	11543	11234	10918	10186	9230	8163	-
		BHP	2.27	2.36	2.46	2.61	2.72	2.79	-
		Sones	23.3	23.1	22.7	22.2	21.7	20.2	-
3	950	CFM	12323	12023	11732	11091	10291	9343	9816
		BHP	2.63	2.72	2.82	3.01	3.14	3.24	3.19
		Sones	25.3	25.1	24.9	24.4	24.0	23.3	21.7

Power Ratings (BHP) does not include transmission losses.
Performance certified is for installation type A - free inlet, free outlet.
Performance ratings do not include the effects of birdscreen in the airstream.
The sound ratings shown are loudness values in fan sones @ 5' (1.5m) in a hemispherical free field calculated per AMCA Standard 301. Values shown are for:
Installation Type A: free inlet hemispherical sone levels.

S&P USA Ventilation Systems, LLC., Div. of Soler & Palau Ventilation Group, certifies that the Models STXB shown herein are licensed to bear the AMCA Seal. The ratings shown are based on test and procedures performed in accordance with AMCA Publication 211 and AMCA Publication 311 and comply with the requirement of the AMCA Certified Ratings Program.

STANDARD 705 for Electrical
STANDARD 762 for Grease Removal

STXB - SIZE 30

Motor HP	RPM		Static Pressure in Inches w.g.												
			0	0.125	0.25	0.375	0.5	0.625	0.75	0.875	1	1.25	1.5	1.75	2
1/2	250	CFM	4664	3236	-	-	-	-	-	-	-	-	-	-	-
		BHP	0.10	0.12	-	-	-	-	-	-	-	-	-	-	-
		SONES	4.2	3.1	-	-	-	-	-	-	-	-	-	-	-
1/2	300	CFM	5597	4507	1789	-	-	-	-	-	-	-	-	-	-
		BHP	0.17	0.21	0.17	-	-	-	-	-	-	-	-	-	-
		SONES	6.1	4.8	3.8	-	-	-	-	-	-	-	-	-	-
1/2	350	CFM	6530	5604	4467	-	-	-	-	-	-	-	-	-	-
		BHP	0.27	0.32	0.34	-	-	-	-	-	-	-	-	-	-
		SONES	8.8	7.2	6.2	-	-	-	-	-	-	-	-	-	-
1/2	400	CFM	7463	6681	5810	4430	-	-	-	-	-	-	-	-	-
		BHP	0.41	0.46	0.50	0.50	-	-	-	-	-	-	-	-	-
		SONES	11.3	10.0	8.3	7.2	-	-	-	-	-	-	-	-	-
3/4	450	CFM	8396	7704	6941	6090	4920	-	-	-	-	-	-	-	-
		BHP	0.58	0.64	0.70	0.73	0.71	-	-	-	-	-	-	-	-
		SONES	13.0	12.0	10.8	10.1	8.6	-	-	-	-	-	-	-	-
1	500	CFM	9329	8697	8036	7358	6472	5460	-	-	-	-	-	-	-
		BHP	0.79	0.86	0.93	0.98	1.00	0.97	-	-	-	-	-	-	-
		SONES	15.4	14.4	13.6	12.8	12.0	10.4	-	-	-	-	-	-	-
1-1/2	550	CFM	10262	9677	9116	8477	7829	6956	6014	-	-	-	-	-	-
		BHP	1.05	1.13	1.21	1.27	1.31	1.33	1.29	-	-	-	-	-	-
		SONES	18.3	17.3	16.5	15.7	15.0	14.1	12.5	-	-	-	-	-	-
2	600	CFM	11195	10653	10161	9570	9015	8370	7540	6537	3578	-	-	-	-
		BHP	1.37	1.45	1.54	1.62	1.67	1.71	1.72	1.68	1.38	-	-	-	-
		SONES	21.5	20.5	19.5	18.6	17.9	17.2	16.3	14.8	13.4	-	-	-	-
2	650	CFM	12128	11624	11167	10659	10111	9604	8977	8206	7107	-	-	-	-
		BHP	1.74	1.83	1.93	2.02	2.09	2.14	2.18	2.19	2.14	-	-	-	-
		SONES	25.0	23.9	22.9	21.8	21.1	20.3	19.6	18.7	17.3	-	-	-	-
3	700	CFM	13060	12590	12159	11723	11208	10725	10236	9641	8935	7534	-	-	-
		BHP	2.17	2.27	2.37	2.48	2.56	2.63	2.68	2.73	2.74	2.66	-	-	-
		SONES	28.7	27.4	26.2	25.2	24.3	23.5	22.7	22.1	21.2	18.5	-	-	-
3	750	CFM	13993	13553	13142	12752	12297	11810	11378	10910	10351	8850	7095	-	-
		BHP	2.67	2.77	2.88	3.00	3.10	3.18	3.25	3.31	3.36	3.33	3.18	-	-
		SONES	32.0	31.0	30.0	29.0	27.5	26.5	25.7	25.0	24.3	22.3	19.8	-	-
5	800	CFM	14926	14512	14118	13755	13362	12912	12468	12066	11620	10512	8860	6067	-
		BHP	3.24	3.35	3.47	3.59	3.71	3.81	3.89	3.95	4.02	4.09	3.99	3.59	-
		SONES	35.1	34.0	33.1	32.2	31.3	29.3	28.6	27.9	27.2	26.2	23.6	21.4	-
5	850	CFM	15859	15468	15094	14747	14400	13995	13566	13162	12782	11876	10711	9248	5394
		BHP	3.89	4.00	4.12	4.25	4.38	4.50	4.60	4.68	4.75	4.87	4.89	4.77	4.02
		SONES	37.6	36.7	35.8	35.0	34.2	32.9	31.5	30.9	30.3	29.3	28.0	25.5	23.4
5	900	CFM	16792	16422	16066	15732	15408	15057	14659	14253	13883	13127	12181	10937	9840
		BHP	4.62	4.74	4.86	5.00	5.14	5.27	5.39	5.48	5.57	5.71	5.81	5.79	5.67
		SONES	40.2	39.4	38.6	37.8	37.1	36.4	35.2	34.6	34.0	32.9	31.9	29.9	27.6
7-1/2	950	CFM	17725	17374	17034	16710	16405	16093	15734	15352	14968	14283	13494	12537	11244
		BHP	5.43	5.56	5.69	5.83	5.98	6.12	6.25	6.37	6.47	6.63	6.78	6.85	6.78
		SONES	42.9	42.2	41.5	40.8	40.2	39.6	39.0	38.3	37.7	36.6	35.6	34.7	32.3
7-1/2	1000	CFM	18658	18323	17999	17686	17394	17102	16789	16436	16071	15386	14716	13901	12944
		BHP	6.34	6.47	6.61	6.75	6.90	7.06	7.21	7.34	7.46	7.65	7.81	7.94	7.98
		SONES	47.0	46.3	45.6	44.9	44.3	43.6	43.0	42.3	41.7	40.6	39.5	38.5	37.4

Power Ratings (BHP) does not include transmission losses.
Performance certified is for installation type A - free inlet, free outlet.
Performance ratings do not include the effects of birdscreen in the airstream.
The sound ratings shown are loudness values in fan sones @ 5' (1.5m) in a hemisphe field calculated per AMCA Standard 301. Values shown are for: Installation Type A: hemispherical sone levels.

S&P USA Ventilation Systems, LLC., Div. of Soler & Palau Ventilation Group, certifies that the Models STXB shown herein are licensed to bear the AMCA Seal. The ratings shown are based on test and procedures performed in accordance with AMCA Publication 211 and AMCA Publication 311 and comply with the requirement of the AMCA Certified Ratings Program.

STANDARD 705 for Electrical
STANDARD 762 for Grease Removal

STXBe / STXBeRHUL - Size 30

Motor HP		RPM		Static Pressure (in. wg)												
				0.00	0.13	0.25	0.38	0.50	0.63	0.75	0.88	1.00	1.25	1.50	1.75	2.00
5HP 1800 RPM		250	CFM	4468	3041	-	-	-	-	-	-	-	-	-	-	-
			BHP	0.10	0.13	-	-	-	-	-	-	-	-	-	-	-
			SONES	3.3	2.7	-	-	-	-	-	-	-	-	-	-	-
		300	CFM	5361	4311	-	-	-	-	-	-	-	-	-	-	-
			BHP	0.18	0.22	-	-	-	-	-	-	-	-	-	-	-
			SONES	4.8	4.3	-	-	-	-	-	-	-	-	-	-	-
		350	CFM	6255	5423	4197	-	-	-	-	-	-	-	-	-	-
			BHP	0.29	0.34	0.36	-	-	-	-	-	-	-	-	-	-
			SONES	6.8	6.3	5.4	-	-	-	-	-	-	-	-	-	-
		400	CFM	7148	6455	5524	4186	-	-	-	-	-	-	-	-	-
			BHP	0.43	0.49	0.53	0.52	-	-	-	-	-	-	-	-	-
			SONES	8.8	8.2	7.5	6.6	-	-	-	-	-	-	-	-	-
		450	CFM	8042	7431	6678	5739	4329	-	-	-	-	-	-	-	-
			BHP	0.61	0.68	0.73	0.76	0.72	-	-	-	-	-	-	-	-
			SONES	10.8	10.2	9.8	8.9	7.9	-	-	-	-	-	-	-	-
		500	CFM	8935	8385	7778	7008	6082	4696	-	-	-	-	-	-	-
			BHP	0.84	0.91	0.98	1.03	1.04	0.97	-	-	-	-	-	-	-
			SONES	13.1	12.4	12.0	11.5	10.4	9.5	-	-	-	-	-	-	-
		550	CFM	9829	9327	8817	8154	7423	6536	5250	-	-	-	-	-	-
			BHP	1.12	1.19	1.27	1.34	1.38	1.38	1.30	-	-	-	-	-	-
			SONES	15.5	14.9	14.3	14.1	13.3	12.2	11.3	-	-	-	-	-	-
		600	CFM	10722	10263	9803	9260	8621	7916	7086	5935	-	-	-	-	-
			BHP	1.45	1.53	1.62	1.70	1.76	1.79	1.79	1.71	-	-	-	-	-
			SONES	17.9	17.3	16.7	16.5	16.3	15.3	14.3	13.4	-	-	-	-	-
	7.5HP 1800 RPM	650	CFM	11616	11192	10770	10317	9747	9154	8481	7711	6708	-	-	-	-
			BHP	1.84	1.93	2.03	2.12	2.20	2.25	2.28	2.27	2.21	-	-	-	-
			SONES	20.5	19.8	19.2	18.9	18.7	18.3	17.4	16.5	15.7	-	-	-	-
		700	CFM	12509	12116	11724	11323	10847	10302	9741	9105	8395	6303	-	-	-
			BHP	2.30	2.40	2.50	2.60	2.70	2.77	2.82	2.85	2.84	2.63	-	-	-
			SONES	23.2	22.5	22.1	21.7	21.2	21.1	20.6	19.6	18.8	17.2	-	-	-
		750	CFM	13403	13036	12668	12302	11902	11417	10906	10375	9779	8366	5958	-	-
			BHP	2.83	2.93	3.04	3.15	3.26	3.36	3.43	3.48	3.50	3.46	3.08	-	-
			SONES	26.0	25.5	25.0	24.6	24.2	23.7	23.6	22.8	21.9	20.2	18.8	-	-
		800	CFM	14296	13953	13606	13266	12911	12499	12025	11549	11049	9884	8372	-	-
			BHP	3.43	3.54	3.66	3.78	3.90	4.01	4.10	4.17	4.22	4.25	4.13	-	-
			SONES	28.6	28.1	27.7	27.3	26.9	26.6	26.2	26.0	25.2	23.5	22.0	-	-
		850	CFM	15190	14867	14541	14220	13893	13544	13128	12686	12227	11234	10064	8458	-
			BHP	4.12	4.24	4.35	4.48	4.61	4.73	4.84	4.94	5.01	5.09	5.08	4.87	-
			SONES	31.5	31.0	30.5	30.1	29.7	29.3	28.9	28.6	28.3	26.7	25.2	23.8	-
		900	CFM	16083	15778	15471	15166	14861	14545	14190	13796	13356	12487	11477	10314	8657
			BHP	4.89	5.01	5.14	5.27	5.40	5.54	5.67	5.78	5.88	6.00	6.05	6.00	5.72
			SONES	34.6	34.1	33.6	33.1	32.6	32.2	31.9	31.6	31.3	30.1	28.5	27.1	25.7
		950	CFM	16949	16665	16369	16058	15728	15384	15035	14686	14324	13495	12599	11617	10448
			BHP	5.79	5.92	6.05	6.18	6.30	6.41	6.52	6.62	6.71	6.85	6.93	6.94	6.87
			SONES	37.1	36.6	36.3	35.9	35.5	35.1	34.8	34.4	34.0	33.0	32.0	31.1	30.2
		1000	CFM	17841	17572	17293	17002	16693	16372	16040	15711	15377	14648	13814	12952	11974
			BHP	6.75	6.89	7.03	7.17	7.29	7.42	7.53	7.64	7.75	7.92	8.04	8.10	8.09
			SONES	40.0	39.6	39.2	38.8	38.4	38.0	37.7	37.4	37.2	36.3	35.4	34.5	33.6

Power Ratings (BHP) does not include transmission losses.
Performance certified is for installation type A - free inlet, free outlet.
Performance ratings do not include the effects of birdscreen in the airstream.
The sound ratings shown are loudness values in fan sones @ 5' (1.5m) in a hemispherical free field calculated per AMCA Standard 301. Values shown are for: Installation Type A: free inlet hemispherical sone levels.

S&P USA Ventilation Systems, LLC., Div. of Soler & Palau Ventilation Group, certifies that the Models STXB shown herein are licensed to bear the AMCA Seal. The ratings shown are based on test and procedures performed in accordance with AMCA Publication 211 and AMCA Publication 311 and comply with the requirement of the AMCA Certified Ratings Program.

STANDARD 705 for Electrical
STANDARD 762 for Grease Removal

STXB - SIZE 30 HIGH PRESSURE

Motor HP	RPM		Static Pressure in Inches w.g.										
			0.5	0.625	0.75	1	1.25	1.5	1.75	2	2.25	2.5	2.75
3/4	450	CFM	4085	-	-	-	-	-	-	-	-	-	-
		BHP	0.51	-	-	-	-	-	-	-	-	-	-
		SONES	7.5	-	-	-	-	-	-	-	-	-	-
3/4	500	CFM	5300	5637	-	-	-	-	-	-	-	-	-
		BHP	0.69	0.66	-	-	-	-	-	-	-	-	-
		SONES	10.3	9.1	-	-	-	-	-	-	-	-	-
1	550	CFM	6271	5733	5412	-	-	-	-	-	-	-	-
		BHP	0.87	0.92	0.93	-	-	-	-	-	-	-	-
		SONES	12.9	12.4	11.1	-	-	-	-	-	-	-	-
1-1/2	600	CFM	7156	6731	6226	5810	-	-	-	-	-	-	-
		BHP	1.08	1.15	1.20	1.21	-	-	-	-	-	-	-
		SONES	15.7	15.2	14.7	11.6	-	-	-	-	-	-	-
1-1/2	650	CFM	7980	7641	7234	6138	-	-	-	-	-	-	-
		BHP	1.32	1.40	1.47	1.54	-	-	-	-	-	-	-
		SONES	18.5	17.9	17.5	16.0	-	-	-	-	-	-	-
2	700	CFM	8775	8487	8158	7345	9653	-	-	-	-	-	-
		BHP	1.58	1.68	1.77	1.89	1.27	-	-	-	-	-	-
		SONES	21.3	20.7	20.2	19.3	16.8	-	-	-	-	-	-
3	750	CFM	9554	9295	9019	8343	7469	6850	-	-	-	-	-
		BHP	1.89	1.99	2.09	2.26	2.36	2.37	-	-	-	-	-
		SONES	24.8	23.4	22.6	21.7	20.9	17.6	-	-	-	-	-
3	800	CFM	10326	10083	9837	9272	8573	7627	-	-	-	-	-
		BHP	2.23	2.34	2.45	2.65	2.80	2.88	-	-	-	-	-
		SONES	28.5	27.2	25.4	24.0	23.2	21.8	-	-	-	-	-
5	850	CFM	11090	10860	10632	10145	9547	8837	7830	5491	-	-	-
		BHP	2.62	2.73	2.85	3.08	3.27	3.40	3.45	3.15	-	-	-
		SONES	30.8	29.9	28.6	26.3	25.5	24.9	23.1	20.2	-	-	-
5	900	CFM	11846	11630	11413	10974	10466	9859	9135	8169	8715	-	-
		BHP	3.05	3.17	3.29	3.54	3.77	3.94	4.07	4.09	4.10	-	-
		SONES	33.2	32.3	31.4	28.9	27.7	27.1	26.6	24.5	22.0	-	-
5	950	CFM	12598	12394	12188	11779	11337	10812	10213	9479	10272	6700	-
		BHP	3.53	3.66	3.78	4.04	4.30	4.51	4.68	4.80	4.67	4.53	-
		SONES	35.7	34.9	34.0	32.1	30.7	29.8	29.1	28.5	26.2	23.9	-
7-1/2	1000	CFM	13345	13151	12956	12567	12168	11715	11187	10599	9869	11274	-
		BHP	4.05	4.19	4.32	4.59	4.87	5.13	5.33	5.50	5.61	5.30	-
		SONES	38.3	37.5	36.7	35.2	34.1	33.3	32.5	31.8	31.2	28.5	-
7-1/2	1050	CFM	14088	13903	13718	13346	12976	12576	12116	11591	11017	10300	11443
		BHP	4.63	4.78	4.92	5.20	5.49	5.78	6.02	6.22	6.39	6.50	6.27
		SONES	40.9	40.2	39.5	38.6	37.7	36.8	36.0	35.3	34.7	34.0	31.2
7-1/2	1100	CFM	14829	14651	14475	14121	13768	13403	13001	12541	12030	11466	10771
		BHP	5.26	5.42	5.57	5.86	6.16	6.47	6.76	7.00	7.20	7.37	7.48
		SONES	43.8	43.4	43.0	42.3	41.6	40.7	39.8	39.0	38.4	37.8	37.0
7-1/2	1150	CFM	15567	15396	15227	14889	14549	14211	13849	13445	12990	12496	11945
		BHP	5.95	6.11	6.28	6.59	6.89	7.21	7.53	7.82	8.05	8.26	8.43
		SONES	47.9	47.4	47.0	46.3	45.7	44.7	43.9	43.1	42.3	41.7	41.1

Power Ratings (BHP) does not include transmission losses.
Performance certified is for installation type A - free inlet, free outlet.
Performance ratings do not include the effects of birdscreen in the airstream.
The sound ratings shown are loudness values in fan sones @ 5' (1.5m) in a hemispherical free field calculated per AMCA Standard 301. Values shown are for: Installation Type A: free inlet hemispherical sone levels.

S&P USA Ventilation Systems, LLC., Div. of Soler & Palau Ventilation Group, certifies that the Models STXB shown herein are licensed to bear the AMCA Seal. The ratings shown are based on test and procedures performed in accordance with AMCA Publication 211 and AMCA Publication 311 and comply with the requirement of the AMCA Certified Ratings Program.

STANDARD 705 for Electrical
STANDARD 762 for Grease Removal

STXB - SIZE 33

Motor HP	RPM		Static Pressure in Inches w.g.											
			0	0.125	0.25	0.375	0.5	0.625	0.75	0.875	1	1.25	1.5	1.75
1/2	250	CFM	5952	4431	-	-	-	-	-	-	-	-	-	-
		BHP	0.15	0.19	-	-	-	-	-	-	-	-	-	-
		SONES	4.7	3.6	-	-	-	-	-	-	-	-	-	-
1/2	300	CFM	7143	6024	-	-	-	-	-	-	-	-	-	-
		BHP	0.26	0.32	-	-	-	-	-	-	-	-	-	-
		SONES	6.7	5.5	-	-	-	-	-	-	-	-	-	-
1/2	350	CFM	8333	7414	6136	4760	-	-	-	-	-	-	-	-
		BHP	0.42	0.49	0.52	0.49	-	-	-	-	-	-	-	-
		SONES	8.7	7.3	6.8	6.3	-	-	-	-	-	-	-	-
3/4	400	CFM	9523	8743	7792	6444	-	-	-	-	-	-	-	-
		BHP	0.62	0.70	0.76	0.77	-	-	-	-	-	-	-	-
		SONES	10.8	9.4	9.0	8.5	-	-	-	-	-	-	-	-
1	450	CFM	10714	10039	9254	8261	7200	4753	-	-	-	-	-	-
		BHP	0.89	0.98	1.05	1.10	1.09	0.95	-	-	-	-	-	-
		SONES	13.3	12.0	11.2	10.8	10.3	9.8	-	-	-	-	-	-
1-1/2	500	CFM	11904	11309	10620	9851	8862	7924	-	-	-	-	-	-
		BHP	1.22	1.32	1.41	1.48	1.51	1.49	-	-	-	-	-	-
		SONES	16.0	14.7	13.8	13.4	13.0	12.5	-	-	-	-	-	-
2	550	CFM	13095	12562	11951	11302	10530	9575	8776	-	-	-	-	-
		BHP	1.62	1.73	1.84	1.93	1.99	2.01	1.98	-	-	-	-	-
		SONES	18.9	17.7	16.6	16.1	15.8	15.4	14.9	-	-	-	-	-
3	600	CFM	14285	13802	13260	12675	12047	11292	10395	9667	-	-	-	-
		BHP	2.10	2.23	2.35	2.45	2.54	2.60	2.61	2.58	-	-	-	-
		SONES	22.0	20.8	19.7	18.9	18.6	18.3	18.1	17.6	-	-	-	-
3	650	CFM	15475	15034	14545	14010	13466	12853	12130	11301	10489	-	-	-
		BHP	2.67	2.81	2.94	3.06	3.16	3.25	3.31	3.32	3.28	-	-	-
		SONES	24.7	23.6	22.6	21.6	21.3	21.0	20.7	20.4	20.0	-	-	-
5	700	CFM	16666	16259	15814	15332	14828	14308	13717	13032	12272	10812	9520	-
		BHP	3.34	3.48	3.63	3.76	3.88	3.99	4.07	4.13	4.15	4.06	3.89	-
		SONES	27.6	26.6	25.6	24.6	24.0	23.6	23.3	23.1	22.8	22.0	21.1	-
5	750	CFM	17856	17479	17070	16632	16162	15696	15193	14629	13988	12436	10261	-
		BHP	4.11	4.26	4.42	4.56	4.70	4.82	4.93	5.02	5.08	5.07	4.80	-
		SONES	30.6	29.6	28.7	27.8	26.9	26.6	26.3	26.1	25.8	25.2	24.3	-
7-1/2	800	CFM	19047	18694	18317	17914	17486	17043	16601	16119	15585	14347	12888	-
		BHP	4.98	5.15	5.31	5.48	5.63	5.77	5.89	6.00	6.09	6.19	6.12	-
		SONES	33.9	32.9	31.9	31.0	30.2	29.6	29.3	29.0	28.8	28.2	27.6	-
7-1/2	850	CFM	20237	19907	19556	19183	18790	18376	17964	17540	17080	16017	14756	13706
		BHP	5.98	6.15	6.33	6.50	6.67	6.83	6.97	7.09	7.21	7.38	7.42	7.34
		SONES	37.4	36.4	35.5	34.6	33.7	32.8	32.5	32.2	32.0	31.4	30.9	30.2

Power Ratings (BHP) does not include transmission losses.
Performance certified is for installation type A - free inlet, free outlet.
Performance ratings do not include the effects of birdscreen in the airstream.
The sound ratings shown are loudness values in fan sones @ 5' (1.5m) in a hemispherical free field calculated per AMCA Standard 301. Values shown are for: Installation Type A: free inlet hemispherical sone levels.

S&P USA Ventilation Systems, LLC., Div. of Soler & Palau Ventilation Group, certifies that the Models STXB shown herein are licensed to bear the AMCA Seal. The ratings shown are based on test and procedures performed in accordance with AMCA Publication 211 and AMCA Publication 311 and comply with the requirement of the AMCA Certified Ratings Program.

STANDARD 705 for Electrical
STANDARD 762 for Grease Removal

STXB - SIZE 33 HIGH PRESSURE

Motor HP	RPM		Static Pressure in Inches w.g.								
			0.5	0.625	0.75	1	1.25	1.5	1.75	2	2.25
1	500	CFM	6372	-	-	-	-	-	-	-	-
		BHP	0.99	-	-	-	-	-	-	-	-
		SONES	12.9	-	-	-	-	-	-	-	-
1-1/2	550	CFM	7514	6910	-	-	-	-	-	-	-
		BHP	1.27	1.32	-	-	-	-	-	-	-
		SONES	15.8	15.3	-	-	-	-	-	-	-
1-1/2	600	CFM	8596	8065	7509	-	-	-	-	-	-
		BHP	1.59	1.66	1.72	-	-	-	-	-	-
		SONES	18.5	18.4	17.7	-	-	-	-	-	-
2	650	CFM	9628	9168	8669	7585	-	-	-	-	-
		BHP	1.95	2.04	2.12	2.22	-	-	-	-	-
		SONES	21.2	21.2	21.2	19.7	-	-	-	-	-
3	700	CFM	10621	10219	9783	8843	-	-	-	-	-
		BHP	2.37	2.48	2.57	2.71	-	-	-	-	-
		SONES	23.9	23.9	23.8	23.1	-	-	-	-	-
3	750	CFM	11583	11231	10846	9998	9087	-	-	-	-
		BHP	2.83	2.96	3.07	3.26	3.38	-	-	-	-
		SONES	26.7	26.5	26.5	26.5	25.2	-	-	-	-
5	800	CFM	12524	12212	11870	11116	10295	9395	-	-	-
		BHP	3.36	3.50	3.63	3.86	4.02	4.13	-	-	-
		SONES	29.8	29.3	29.3	29.3	28.7	27.5	-	-	-
5	850	CFM	13449	13168	12864	12188	11439	10655	9767	-	-
		BHP	3.95	4.10	4.25	4.51	4.72	4.87	4.97	-	-
		SONES	33.1	32.6	32.3	32.4	32.4	31.4	30.2	-	-
7-1/2	900	CFM	14362	14106	13833	13225	12549	11819	11067	-	-
		BHP	4.61	4.77	4.93	5.23	5.48	5.67	5.82	-	-
		SONES	36.4	35.9	35.5	35.4	35.5	35.3	34.3	-	-
7-1/2	950	CFM	15265	15030	14781	14232	13620	12956	12261	11527	-
		BHP	5.34	5.51	5.68	6.01	6.30	6.54	6.73	6.87	-
		SONES	40.1	39.6	39.1	38.7	38.8	38.9	38.4	37.4	-
7-1/2	1000	CFM	16160	15944	15714	15216	14658	14053	13405	12743	12033
		BHP	6.15	6.33	6.51	6.87	7.19	7.47	7.70	7.89	8.03
		SONES	44.1	43.6	43.1	42.3	42.2	42.3	42.4	41.7	40.8

Power Ratings (BHP) does not include transmission losses.
Performance certified is for installation type A - free inlet, free outlet.
Performance ratings do not include the effects of birdscreen in the airstream.
The sound ratings shown are loudness values in fan sones @ 5' (1.5m) in a hemispherical free field calculated per AMCA Standard 301. Values shown are for: Installation Type A: free inlet hemispherical sone levels.

S&P USA Ventilation Systems, LLC., Div. of Soler & Palau Ventilation Group, certifies that the Models STXB shown herein are licensed to bear the AMCA Seal. The ratings shown are based on test and procedures performed in accordance with AMCA Publication 211 and AMCA Publication 311 and comply with the requirement of the AMCA Certified Ratings Program.

STANDARD 705 for Electrical
STANDARD 762 for Grease Removal

STXB - SIZE 36

Motor HP	RPM		Static Pressure in Inches w.g.												
			0	0.125	0.25	0.375	0.5	0.625	0.75	0.875	1	1.25	1.5	1.75	2
3/4	300	CFM	9100	8064	6634	-	-	-	-	-	-	-	-	-	-
		BHP	0.42	0.50	0.53	-	-	-	-	-	-	-	-	-	-
		SONES	8.0	7.1	6.5	-	-	-	-	-	-	-	-	-	-
3/4	325	CFM	9858	8911	7718	5612	-	-	-	-	-	-	-	-	-
		BHP	0.54	0.62	0.67	0.65	-	-	-	-	-	-	-	-	-
		SONES	9.0	8.2	7.8	7.0	-	-	-	-	-	-	-	-	-
3/4	350	CFM	10616	9753	8724	7224	-	-	-	-	-	-	-	-	-
		BHP	0.67	0.76	0.83	0.84	-	-	-	-	-	-	-	-	-
		SONES	10.1	9.4	9.0	8.3	-	-	-	-	-	-	-	-	-
1	375	CFM	11374	10580	9663	8479	6413	-	-	-	-	-	-	-	-
		BHP	0.83	0.92	1.00	1.04	0.99	-	-	-	-	-	-	-	-
		SONES	11.2	10.7	10.3	9.7	9.0	-	-	-	-	-	-	-	-
1-1/2	400	CFM	12133	11397	10560	9534	8438	-	-	-	-	-	-	-	-
		BHP	1.00	1.11	1.19	1.25	1.26	-	-	-	-	-	-	-	-
		SONES	12.6	12.2	11.7	11.3	10.5	-	-	-	-	-	-	-	-
1-1/2	425	CFM	12891	12206	11429	10543	9417	8316	-	-	-	-	-	-	-
		BHP	1.20	1.31	1.41	1.48	1.52	1.50	-	-	-	-	-	-	-
		SONES	14.1	13.6	13.1	12.7	12.1	11.3	-	-	-	-	-	-	-
2	450	CFM	13649	13008	12279	11493	10525	9375	-	-	-	-	-	-	-
		BHP	1.43	1.54	1.65	1.74	1.79	1.79	-	-	-	-	-	-	-
		SONES	15.6	15.1	14.7	14.3	13.8	13.0	-	-	-	-	-	-	-
2	475	CFM	14408	13804	13123	12404	11548	10521	10104	-	-	-	-	-	-
		BHP	1.68	1.80	1.92	2.01	2.09	2.12	2.12	-	-	-	-	-	-
		SONES	17.0	16.6	16.2	15.8	15.4	14.8	14.1	-	-	-	-	-	-
3	500	CFM	15166	14597	13960	13288	12531	11638	10478	9341	-	-	-	-	-
		BHP	1.96	2.09	2.21	2.32	2.40	2.46	2.46	2.41	-	-	-	-	-
		SONES	18.5	18.1	17.7	17.3	17.0	16.5	15.8	15.1	-	-	-	-	-
3	525	CFM	15924	15385	14787	14152	13470	12665	11746	11209	-	-	-	-	-
		BHP	2.27	2.41	2.54	2.65	2.75	2.83	2.86	2.86	-	-	-	-	-
		SONES	20.1	19.5	19.1	18.8	18.4	18.1	17.6	17.0	-	-	-	-	-
3	550	CFM	16682	16170	15607	15000	14378	13662	12844	11850	11752	-	-	-	-
		BHP	2.61	2.75	2.89	3.02	3.12	3.21	3.28	3.29	3.29	-	-	-	-
		SONES	22.0	21.2	20.8	20.4	20.1	19.8	19.3	18.7	18.0	-	-	-	-
5	575	CFM	17441	16953	16421	15844	15262	14616	13869	13051	11968	-	-	-	-
		BHP	2.98	3.13	3.28	3.41	3.53	3.63	3.71	3.76	3.74	-	-	-	-
		SONES	23.7	22.7	22.3	22.0	21.6	21.3	20.9	20.4	19.7	-	-	-	-
5	600	CFM	18199	17733	17228	16684	16128	15537	14869	14116	13268	11592	-	-	-
		BHP	3.39	3.54	3.69	3.84	3.97	4.08	4.18	4.25	4.27	4.20	-	-	-
		SONES	25.1	24.3	23.8	23.4	23.0	22.7	22.4	22.0	21.4	20.2	-	-	-
5	625	CFM	18957	18512	18031	17516	16980	16434	15827	15141	14404	13397	-	-	-
		BHP	3.83	3.99	4.15	4.30	4.44	4.56	4.67	4.76	4.82	4.82	-	-	-
		SONES	26.5	25.8	25.4	25.0	24.5	24.1	23.8	23.5	23.0	21.9	-	-	-
5	650	CFM	19716	19288	18830	18341	17822	17312	16755	16135	15436	13773	11225	-	-
		BHP	4.31	4.48	4.64	4.80	4.95	5.08	5.20	5.31	5.39	5.42	5.17	-	-
		SONES	27.9	27.4	27.0	26.6	26.2	25.8	25.4	25.1	24.7	23.7	22.7	-	-
7-1/2	700	CFM	21232	20837	20418	19974	19505	19026	18544	18021	17448	16157	14448	10960	-
		BHP	5.38	5.56	5.74	5.92	6.08	6.24	6.37	6.50	6.62	6.76	6.75	6.20	-
		SONES	31.1	30.7	30.3	29.9	29.5	29.1	28.8	28.4	28.0	27.3	26.4	25.4	-
7-1/2	750	CFM	22749	22382	21995	21588	21161	20713	20271	19815	19327	18218	16959	15755	12826
		BHP	6.62	6.81	7.00	7.19	7.38	7.55	7.71	7.85	7.99	8.22	8.34	8.32	7.91
		SONES	34.7	34.3	33.9	33.5	33.1	32.8	32.4	32.1	31.7	31.1	30.2	29.2	28.4

Power Ratings (BHP) does not include transmission losses.
Performance certified is for installation type A - free inlet, free outlet.
Performance ratings do not include the effects of birdscreen in the airstream.
The sound ratings shown are loudness values in fan sones @ 5' (1.5m) in a hemisphe
field calculated per AMCA Standard 301. Values shown are for: Installation Type A:
hemispherical sone levels.

S&P USA Ventilation Systems, LLC., Div. of Soler & Palau Ventilation Group, certifies that the Models STXB shown herein are licensed to bear the AMCA Seal. The ratings shown are based on test and procedures performed in accordance with AMCA Publication 211 and AMCA Publication 311 and comply with the requirement of the AMCA Certified Ratings Program.

STANDARD 705 for Electrical
STANDARD 762 for Grease Removal

STXB - SIZE 36 HIGH PRESSURE

Motor HP	RPM		Static Pressure in Inches w.g.											
			0.5	0.625	0.75	1	1.25	1.5	1.75	2	2.25	2.5	2.75	3
1	400	CFM	5806	-	-	-	-	-	-	-	-	-	-	-
		BHP	0.86	-	-	-	-	-	-	-	-	-	-	-
		SONES	9.1	-	-	-	-	-	-	-	-	-	-	-
1	425	CFM	6572	5477	-	-	-	-	-	-	-	-	-	-
		BHP	1.02	1.02	-	-	-	-	-	-	-	-	-	-
		SONES	10.4	9.7	-	-	-	-	-	-	-	-	-	-
1-1/2	450	CFM	7411	6565	-	-	-	-	-	-	-	-	-	-
		BHP	1.20	1.22	-	-	-	-	-	-	-	-	-	-
		SONES	11.8	11.2	-	-	-	-	-	-	-	-	-	-
1-1/2	475	CFM	8180	7342	6559	-	-	-	-	-	-	-	-	-
		BHP	1.39	1.43	1.44	-	-	-	-	-	-	-	-	-
		SONES	13.1	12.7	12.0	-	-	-	-	-	-	-	-	-
1-1/2	500	CFM	8905	8185	7357	-	-	-	-	-	-	-	-	-
		BHP	1.59	1.65	1.67	-	-	-	-	-	-	-	-	-
		SONES	14.6	14.2	13.7	-	-	-	-	-	-	-	-	-
2	525	CFM	9596	8963	8206	-	-	-	-	-	-	-	-	-
		BHP	1.80	1.88	1.93	-	-	-	-	-	-	-	-	-
		SONES	16.0	15.6	15.2	-	-	-	-	-	-	-	-	-
2	550	CFM	10262	9699	9040	7646	-	-	-	-	-	-	-	-
		BHP	2.04	2.12	2.19	2.23	-	-	-	-	-	-	-	-
		SONES	17.4	17.0	16.6	15.6	-	-	-	-	-	-	-	-
3	575	CFM	10909	10402	9815	8443	-	-	-	-	-	-	-	-
		BHP	2.29	2.39	2.47	2.55	-	-	-	-	-	-	-	-
		SONES	18.9	18.5	18.1	17.3	-	-	-	-	-	-	-	-
3	600	CFM	11541	11079	10553	9257	7670	-	-	-	-	-	-	-
		BHP	2.56	2.67	2.76	2.88	2.87	-	-	-	-	-	-	-
		SONES	20.1	19.7	19.3	18.7	17.6	-	-	-	-	-	-	-
3	625	CFM	12161	11736	11260	10111	8950	-	-	-	-	-	-	-
		BHP	2.86	2.97	3.07	3.23	3.27	-	-	-	-	-	-	-
		SONES	21.5	21.1	20.7	19.9	19.0	-	-	-	-	-	-	-
5	650	CFM	12773	12378	11942	10908	9592	6101	-	-	-	-	-	-
		BHP	3.18	3.30	3.40	3.59	3.68	3.29	-	-	-	-	-	-
		SONES	23.0	22.6	22.2	21.4	20.6	19.5	-	-	-	-	-	-
5	675	CFM	13385	13007	12605	11665	10498	9427	-	-	-	-	-	-
		BHP	3.52	3.64	3.76	3.97	4.10	4.12	-	-	-	-	-	-
		SONES	24.5	24.1	23.7	23.0	22.3	21.1	-	-	-	-	-	-
5	700	CFM	13990	13627	13252	12392	11345	10242	-	-	-	-	-	-
		BHP	3.89	4.02	4.14	4.37	4.54	4.60	-	-	-	-	-	-
		SONES	26.0	25.6	25.3	24.5	23.8	23.0	-	-	-	-	-	-
5	725	CFM	14589	14239	13887	13094	12142	10983	9991	-	-	-	-	-
		BHP	4.28	4.42	4.54	4.79	4.99	5.10	5.11	-	-	-	-	-
		SONES	27.5	27.2	26.8	26.1	25.4	24.7	23.6	-	-	-	-	-
5	750	CFM	15183	14851	14512	13774	12903	11865	10907	-	-	-	-	-
		BHP	4.70	4.84	4.98	5.23	5.46	5.61	5.66	-	-	-	-	-
		SONES	29.1	28.7	28.3	27.6	26.9	26.3	25.4	-	-	-	-	-

Power Ratings (BHP) does not include transmission losses.
Performance certified is for installation type A - free inlet, free outlet.
Performance ratings do not include the effects of birdscreen in the airstream.
The sound ratings shown are loudness values in fan sones @ 5' (1.5m) in a hemispherical free field calculated per AMCA Standard 301. Values shown are for: Installation Type A: free inlet hemispherical sone levels.

S&P USA Ventilation Systems, LLC., Div. of Soler & Palau Ventilation Group, certifies that the Models STXB shown herein are licensed to bear the AMCA Seal. The ratings shown are based on test and procedures performed in accordance with AMCA Publication 211 and AMCA Publication 311 and comply with the requirement of the AMCA Certified Ratings Program.

STANDARD 705 for Electrical
STANDARD 762 for Grease Removal

STXB - SIZE 36 HIGH PRESSURE *(Continued)*

Motor HP	RPM		Static Pressure in Inches w.g.											
			0.5	0.625	0.75	1	1.25	1.5	1.75	2	2.25	2.5	2.75	3
7-1/2	775	CFM	15773	15457	15129	14439	13636	12694	11564	10678	-	-	-	-
		BHP	5.14	5.29	5.44	5.70	5.95	6.14	6.23	6.24	-	-	-	-
		SONES	30.7	30.3	30.0	29.2	28.5	27.9	27.2	26.1	-	-	-	-
7-1/2	800	CFM	16359	16058	15740	15089	14345	13480	12468	11612	9901	-	-	-
		BHP	5.62	5.77	5.92	6.20	6.46	6.69	6.82	6.86	6.76	-	-	-
		SONES	32.4	32.0	31.7	30.9	30.2	29.5	28.9	28.0	26.9	-	-	-
7-1/2	825	CFM	16942	16654	16351	15728	15034	14236	13316	12230	11469	-	-	-
		BHP	6.12	6.28	6.44	6.73	7.01	7.25	7.43	7.52	7.53	-	-	-
		SONES	34.2	33.8	33.4	32.7	32.0	31.3	30.6	29.9	28.8	-	-	-
7-1/2	850	CFM	17521	17246	16957	16358	15707	14967	14122	13144	12356	10953	-	-
		BHP	6.65	6.81	6.98	7.29	7.58	7.84	8.06	8.19	8.23	8.17	-	-
		SONES	36.0	35.6	35.2	34.5	33.8	33.1	32.4	31.8	30.8	29.7	-	-
10	875	CFM	18099	17835	17558	16979	16366	15677	14892	14004	12970	12323	-	-
		BHP	7.21	7.38	7.55	7.88	8.18	8.46	8.71	8.88	8.97	8.98	-	-
		SONES	37.8	37.4	37.0	36.3	35.6	35.0	34.3	33.6	32.9	31.8	-	-
10	900	CFM	18673	18420	18155	17594	17014	16367	15640	14821	13886	13131	12044	-
		BHP	7.81	7.98	8.16	8.50	8.81	9.11	9.38	9.60	9.73	9.77	9.75	-
		SONES	39.6	39.2	38.9	38.2	37.5	36.8	36.2	35.5	34.9	33.9	32.8	-
10	925	CFM	19246	19002	18747	18206	17651	17043	16364	15603	14751	13772	13204	11534
		BHP	8.44	8.62	8.80	9.15	9.48	9.79	10.08	10.33	10.50	10.60	10.61	10.47
		SONES	41.6	41.2	40.9	40.1	39.4	38.7	38.1	37.4	36.8	36.2	35.0	33.9
10	950	CFM	19817	19582	19337	18817	18281	17705	17069	16360	15573	14684	13920	13118
		BHP	9.10	9.28	9.47	9.83	10.18	10.50	10.81	11.09	11.30	11.44	11.49	11.49
		SONES	43.6	43.2	42.9	42.1	41.4	40.7	40.1	39.4	38.8	38.1	37.3	36.2

Power Ratings (BHP) does not include transmission losses.
Performance certified is for installation type A - free inlet, free outlet.
Performance ratings do not include the effects of birdscreen in the airstream.
The sound ratings shown are loudness values in fan sones @ 5' (1.5m) in a hemispherical free field calculated per AMCA Standard 301. Values shown are for: Installation Type A: free inlet hemispherical sone levels.

S&P USA Ventilation Systems, LLC., Div. of Soler & Palau Ventilation Group, certifies that the Models STXB shown herein are licensed to bear the AMCA Seal. The ratings shown are based on test and procedures performed in accordance with AMCA Publication 211 and AMCA Publication 311 and comply with the requirement of the AMCA Certified Ratings Program.

STANDARD 705 for Electrical
STANDARD 762 for Grease Removal

STXB - SIZE 42

Motor HP	RPM		Static Pressure in Inches w.g.										
			0	0.125	0.25	0.375	0.5	0.625	0.75	0.875	1	1.25	1.5
3/4	250	CFM	12105	10708	8262	-	-	-	-	-	-	-	-
		BHP	0.46	0.57	0.62	-	-	-	-	-	-	-	-
		SONES	5.7	4.7	4.2	-	-	-	-	-	-	-	-
3/4	275	CFM	13316	12059	10316	-	-	-	-	-	-	-	-
		BHP	0.61	0.74	0.83	-	-	-	-	-	-	-	-
		SONES	6.9	5.9	5.3	-	-	-	-	-	-	-	-
1	300	CFM	14526	13406	12004	9519	-	-	-	-	-	-	-
		BHP	0.79	0.94	1.05	1.06	-	-	-	-	-	-	-
		SONES	8.0	7.1	6.5	5.9	-	-	-	-	-	-	-
1-1/2	325	CFM	15736	14726	13524	11743	-	-	-	-	-	-	-
		BHP	1.01	1.16	1.29	1.37	-	-	-	-	-	-	-
		SONES	9.0	8.2	7.8	7.0	-	-	-	-	-	-	-
1-1/2	350	CFM	16947	16026	14946	13555	11347	-	-	-	-	-	-
		BHP	1.26	1.43	1.58	1.69	1.69	-	-	-	-	-	-
		SONES	10.1	9.4	9.0	8.3	7.7	-	-	-	-	-	-
2	375	CFM	18158	17311	16311	15178	13537	10934	-	-	-	-	-
		BHP	1.55	1.73	1.90	2.03	2.10	2.03	-	-	-	-	-
		SONES	11.2	10.7	10.3	9.7	9.0	8.5	-	-	-	-	-
3	400	CFM	19368	18584	17657	16678	15367	13497	-	-	-	-	-
		BHP	1.88	2.07	2.26	2.41	2.53	2.54	-	-	-	-	-
		SONES	12.6	12.2	11.7	11.3	10.5	9.7	-	-	-	-	-
3	425	CFM	20578	19848	18999	18101	17023	15581	13536	-	-	-	-
		BHP	2.25	2.46	2.66	2.83	2.98	3.06	3.02	-	-	-	-
		SONES	14.1	13.6	13.1	12.7	12.1	11.3	10.7	-	-	-	-
5	450	CFM	21789	21106	20321	19476	18559	17372	15823	13664	-	-	-
		BHP	2.67	2.89	3.10	3.30	3.46	3.60	3.64	3.55	-	-	-
		SONES	15.6	15.1	14.7	14.3	13.8	13.0	12.2	11.7	-	-	-
5	475	CFM	23000	22357	21629	20817	20014	19022	17772	16126	13910	-	-
		BHP	3.14	3.37	3.60	3.82	3.99	4.16	4.26	4.26	4.13	-	-
		SONES	17.0	16.6	16.2	15.8	15.4	14.8	14.1	13.3	12.8	-	-
5	500	CFM	24210	23603	22924	22170	21415	20563	19510	18216	16524	20364	-
		BHP	3.67	3.91	4.15	4.38	4.58	4.76	4.91	4.99	4.95	4.79	-
		SONES	18.5	18.1	17.7	17.3	17.0	16.5	15.8	15.1	14.4	13.9	-
7-1/2	525	CFM	25420	24846	24208	23507	22780	22029	21133	20044	18716	14805	-
		BHP	4.24	4.50	4.75	5.00	5.22	5.41	5.59	5.73	5.78	5.52	-
		SONES	20.1	19.5	19.1	18.8	18.4	18.1	17.6	17.0	16.3	15.2	-
7-1/2	550	CFM	26631	26085	25485	24829	24119	23443	22662	21732	20632	17608	-
		BHP	4.88	5.14	5.41	5.67	5.92	6.13	6.32	6.50	6.62	6.56	-
		SONES	22.0	21.2	20.8	20.4	20.1	19.8	19.3	18.7	18.0	16.9	-
7-1/2	575	CFM	27841	27322	26754	26138	25473	24820	24125	23320	22370	19919	16204
		BHP	5.58	5.85	6.13	6.41	6.67	6.90	7.11	7.31	7.48	7.58	7.25
		SONES	23.7	22.7	22.3	22.0	21.6	21.3	20.9	20.4	19.7	18.6	18.0
7-1/2	600	CFM	29052	28556	28017	27436	26813	26170	25541	24830	24009	21956	19037
		BHP	6.33	6.62	6.91	7.20	7.48	7.74	7.96	8.18	8.38	8.62	8.50
		SONES	25.1	24.3	23.8	23.4	23.0	22.7	22.4	22.0	21.4	20.2	19.3

Power Ratings (BHP) does not include transmission losses.
Performance certified is for installation type A - free inlet, free outlet.
Performance ratings do not include the effects of birdscreen in the airstream.
The sound ratings shown are loudness values in fan sones @ 5' (1.5m) in a hemispherical free field calculated per AMCA Standard 301. Values shown are for: Installation Type A: free inlet hemispherical sone levels.

S&P USA Ventilation Systems, LLC., Div. of Soler & Palau Ventilation Group, certifies that the Models STXB shown herein are licensed to bear the AMCA Seal. The ratings shown are based on test and procedures performed in accordance with AMCA Publication 211 and AMCA Publication 311 and comply with the requirement of the AMCA Certified Ratings Program.

STANDARD 705 for Electrical
STANDARD 762 for Grease Removal

STXB - SIZE 48

Motor HP	RPM		Static Pressure in Inches w.g.										
			0	0.125	0.25	0.375	0.5	0.625	0.75	0.875	1	1.25	1.5
1	225	CFM	16251	13786	10279	-	-	-	-	-	-	-	-
		BHP	0.69	0.84	0.85	-	-	-	-	-	-	-	-
		SONES	10.2	9.7	8.5	-	-	-	-	-	-	-	-
1-1/2	250	CFM	18057	15852	13250	7081	-	-	-	-	-	-	-
		BHP	0.95	1.12	1.20	0.94	-	-	-	-	-	-	-
		SONES	12.9	12.3	11.4	9.8	-	-	-	-	-	-	-
1-1/2	275	CFM	19863	17854	15682	12508	-	-	-	-	-	-	-
		BHP	1.27	1.46	1.58	1.56	-	-	-	-	-	-	-
		SONES	15.5	15.0	14.5	12.9	-	-	-	-	-	-	-
2	300	CFM	21668	19826	17935	15558	11403	13959	-	-	-	-	-
		BHP	1.64	1.86	2.01	2.07	1.90	2.03	-	-	-	-	-
		SONES	17.6	17.1	16.6	15.6	14.3	12.8	-	-	-	-	-
3	325	CFM	23474	21781	20068	18110	15454	9976	-	-	-	-	-
		BHP	2.09	2.33	2.51	2.62	2.60	2.17	-	-	-	-	-
		SONES	19.7	19.2	18.7	18.2	17.0	16.0	-	-	-	-	-
3	350	CFM	25280	23713	22129	20418	18358	15385	8661	-	-	-	-
		BHP	2.61	2.88	3.08	3.23	3.28	3.19	2.36	-	-	-	-
		SONES	21.9	21.4	21.0	20.5	19.7	18.7	17.8	-	-	-	-
5	375	CFM	27086	25627	24143	22623	20885	18661	15412	8254	-	-	-
		BHP	3.21	3.50	3.73	3.91	4.02	4.02	3.83	2.70	-	-	-
		SONES	24.1	23.7	23.2	22.8	22.3	21.5	20.7	19.9	-	-	-
5	400	CFM	28891	27527	26125	24742	23200	21444	19174	15709	8774	-	-
		BHP	3.90	4.21	4.47	4.68	4.83	4.90	4.85	4.57	3.27	-	-
		SONES	26.6	26.2	25.7	25.3	24.9	24.2	23.5	22.8	21.9	-	-
7-1/2	425	CFM	30697	29416	28097	26804	25428	23891	22084	19796	16278	16472	-
		BHP	4.67	5.01	5.29	5.53	5.72	5.85	5.87	5.78	5.43	5.46	-
		SONES	29.2	28.8	28.3	27.9	27.4	27.0	26.3	25.7	25.1	22.9	-
7-1/2	450	CFM	32503	31294	30054	28827	27572	26192	24681	22827	20558	10478	-
		BHP	5.55	5.90	6.22	6.48	6.70	6.87	6.96	6.96	6.84	4.83	-
		SONES	32.3	31.8	31.4	30.9	30.5	30.1	29.3	28.7	28.1	27.0	-
7-1/2	475	CFM	34308	33165	31995	30820	29659	28414	27042	25549	23683	18166	-
		BHP	6.52	6.90	7.24	7.53	7.78	7.99	8.14	8.20	8.16	7.58	-
		SONES	36.0	35.5	35.1	34.7	34.2	33.8	33.3	32.3	31.3	30.3	-
10	500	CFM	36114	35029	33922	32791	31704	30563	29328	27999	26501	22530	-
		BHP	7.61	8.01	8.37	8.69	8.97	9.20	9.40	9.53	9.57	9.35	-
		SONES	40.0	39.5	39.1	38.6	38.2	37.8	37.3	36.7	35.4	33.5	-
10	525	CFM	37920	36888	35836	34764	33718	32657	31532	30311	29024	25784	20808
		BHP	8.81	9.23	9.61	9.96	10.27	10.53	10.76	10.95	11.05	11.00	10.38
		SONES	44.4	43.9	43.4	43.0	42.5	42.0	41.6	41.2	40.2	37.6	36.1

Power Ratings (BHP) does not include transmission losses.
Performance certified is for installation type A - free inlet, free outlet.
Performance ratings do not include the effects of birdscreen in the airstream.
The sound ratings shown are loudness values in fan sones @ 5' (1.5m) in a hemispherical free field calculated per AMCA Standard 301. Values shown are for: Installation Type A: free inlet hemispherical sone levels.

S&P USA Ventilation Systems, LLC., Div. of Soler & Palau Ventilation Group, certifies that the Models STXB shown herein are licensed to bear the AMCA Seal. The ratings shown are based on test and procedures performed in accordance with AMCA Publication 211 and AMCA Publication 311 and comply with the requirement of the AMCA Certified Ratings Program.

STANDARD 705 for Electrical
STANDARD 762 for Grease Removal

MODEL CWD

DIRECT DRIVE CENTRIFUGAL SIDEWALL EXHAUSTER

MODEL FEATURES

- Exhaust air up to 3,360 CFM in high static pressure applications up to 1″ w.g.
- Attractive spun aluminum exterior
- Direct drive units have low sound levels and quiet operation
- Non-overloading backward inclined wheel for efficiency at higher static pressures
- AMCA Air and Sound Licensed
- UL 705 Listed

MODEL OVERVIEW

Model CWD direct drive fans are designed to exhaust air up to 3,360 CFM in high static pressure applications to 1″. The spun aluminum exterior provides a pleasing appearance, weatherproof construction and resistance to corrosion. The low silhouette design is less noticeable on the building exterior and the removable dome provides easy access to the fan interior for service and cleaning. The non-overloading backward inclined centrifugal wheel with its high static pressure capability, makes it suitable for either ducted or nonducted applications. It should be used where a sidewall mounted location is preferred to roof mounting. Direct drive units use smaller diameter wheels with lower rpm's, resulting in low sound levels and quiet operation. They have no belts or fan bearings to maintain or adjust and consequently require very little maintenance.

CWDs are used to exhaust relatively clean air from a variety of industrial, commercial and institutional buildings such as machinery and equipment rooms, storage areas, office buildings, restaurants, retail stores, schools and similar buildings.

CONSTRUCTION FEATURES AND OPTIONS

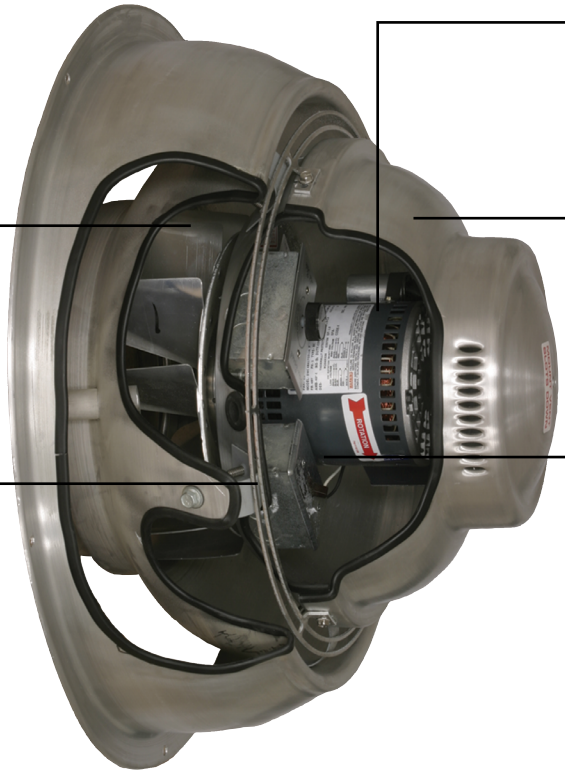

Spun Aluminum Shell
Maximum weather protection.

Centrifugal Wheel
Non-overloading, backward inclined blades for maximum efficiency.

Duct Connection
At wheel inlet.

Aluminum Birdscreen (optional)
Protection from birds and other objects

Factory Run & Tested
Assures dependable operation

AMCA Seal
Assures rating of Sound and Air performance

Motor
Open drip-proof standard and speed controllable.

Spun Aluminum Dome
Provides compartment for out-of-airstream motor location.

Disconnect
Standard with ODP single speed motors.

UL Label
For electrical reliability

Industry best 5 year fan housing warranty, 1 year motor warranty

CONSTRUCTION/SPECIFICATION CHECKLIST

Housing

- Integral spun inlet for efficient performance.
- Spun aluminum dome for weather protection and attractive appearance.
- Motor support of heavy-gauge aluminum for rigidity and strength.
- Ventilated motor compartment with motor out of air stream for long trouble-free service.
- Dome easily removes for access to motor compartment.
- Water-tight construction.
- Duct connection provided at wheel inlet.

Centrifugal Wheel

- Backward inclined for efficiency at higher static pressure.
- Non-overloading for safe operation in ducted systems.
- Statically and dynamically balanced for smooth, quiet operation.
- Heavy aluminum hub for extra strength.
- All aluminum construction.

Motors

- Speed controllable motors available on most models.
- Brands are nationally recognized and locally serviced.
- Single speed open drip-proof are standard.
- Two speed drip-proof and single speed explosion-proof motors are available for most models.
- Disconnect switch standard with single speed drip-proof motors.

AMCA Seal

- Models CWD are licensed for Air and Sound Performance.

UL Label

- UL 705 available when specified.

OPTIONS/ACCESSORIES

Solid State Speed Control: Available with direct drive models. Control is matched to the motor and blower wheel to allow reduction in performance from full motor speed to 60% of full speed. CFM is reduced in direct proportion to motor speed reduction. Exhauster performance can be controlled from the ventilated area.

Motor Operated Damper: Motor operated aluminum damper for positive closure against backdraft.

Automatic Damper: Automatic aluminum damper for ease in installation and effective backdraft protection.

Special Coatings: For protective and decorative purposes. Available coatings include: Synthetic Resin, Epoxy, and Heresite (air-dried phenolic). Contact your representative or the factory for more information on available coatings and colors.

PERFORMANCE/DIMENSIONS

SIZES 7 & 9

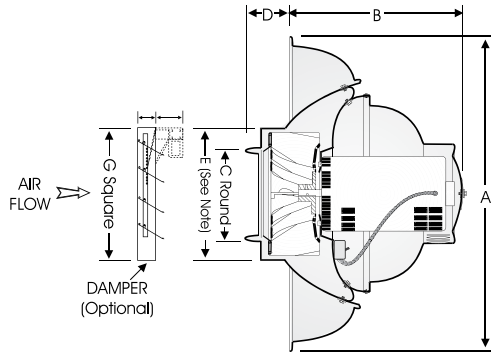

Size	A	B	C	D	E	G	Avg. Ship Wt. (lbs.)
7	15	8	5-15/16	1-1/2	8	8	12
8	20	9	9-15/16	2	12	11	20
9	26	13-1/2	11-15/16	3	15	14	37

	CFM / BHP @ Static Pressure / Sones									Catalog Number	HP	RPM	Tip Speed
	0	1/8	1/4	3/8	1/2	5/8	3/4	7/8	1				
CWD 7	152 .02/2.3	84 .01/1.5	-	-	-	-	-	-	-	070A S	1/25	930	1723
CWD 7	175 .02/3.1	120 .02/2.3	-	-	-	-	-	-	-	070A S	1/25	1070	1982
CWD 7	202 .02/4.1	156 .02/3.4	93 .02/3.2	-	-	-	-	-	-	070A S	1/25	1230	2279
CWD 7	228 .03/5.2	189 .03/4.6	139 .03/4.1	75 .02/4.3	-	-	-	-	-	070A S	1/25	1390	2575
CWD 7	254 .04/6.5	220 .04/5.9	179 .03/5.3	127 .03/5.3	66 .03/5.4	-	-	-	-	070A *	1/25	1550	2871
CWD 9	540 .03/2.5	258 .02/1.9	-	-	-	-	-	-	-	091A S	1/4	685	2004
CWD 9	630 .05/3.5	392 .04/2.9	-	-	-	-	-	-	-	091A S	1/4	800	2340
CWD 9	741 .08/4.9	554 .06/4.3	330 .05/4.0	-	-	-	-	-	-	091A S	1/4	940	2750
CWD 9	804 .09/5.7	637 .08/5.1	426 .07/4.7	236 .05/4.6	-	-	-	-	-	091A S	1/4	1020	2984
CWD 9	898 .12/7.0	755 .11/6.4	564 .09/5.9	390 .08/5.8	221 .07/5.6	-	-	-	-	091A *	1/4	1140	3335
CWD 9	811 .09/6.1	651 .08/5.6	467 .07/4.8	313 .06/4.7	-	-	-	-	-	090A S	1/4	1030	3012
CWD 9	965 .14/8.1	834 .13/7.5	687 .12/7.0	528 .10/6.4	401 .09/5.8	-	-	-	-	090A S	1/4	1225	3583
CWD 9	1083 .19/9.7	970 .18/9.2	842 .17/8.7	704 .16/8.2	565 .14/7.8	454 .12/7.4	-	-	-	090A S	1/4	1375	4021
CWD 9	1221 .26/12.1	1126 .25/11.4	1009 .25/10.9	894 .23/10.5	771 .22/10.2	645 .20/9.8	545 .18/9.5	-	-	090A *	1/4	1550	4534
CWD 9	1320 .34/13.8	1255 .33/13.4	1149 .32/13.1	1047 .31/12.8	937 .30/12.5	823 .28/12.1	709 .26/11.6	617 .24/11.6	532 .23/11.5	090A 33*	1/3	1700	4973

Performance certified is for installation type A - free inlet, free outlet.
Performance ratings include the effects of birdscreen in the airstream.
The sound ratings shown are loudness values in fan sones @ 5' (1.5m) in a hemispherical free field calculated per AMCA Standard 301. Values shown are for: Installation Type A: free inlet hemispherical sone levels.
* Base Unit- AMCA Seal for Sound Rating does not apply to units with speed control.
S RPM range capable with solid state speed control.
Speed (RPM) shown is nominal. Performance is based on actual speed of test.
Note: For round duct connection directly to unit without damper, cut a circular hole equal to dimension E above.

S&P USA Ventilation Systems, LLC., Div. of Soler & Palau Ventilation Group, certifies that the Models CWD shown herein are licensed to bear the AMCA Seal. The ratings shown are based on test and procedures performed in accordance with AMCA Publication 211 and AMCA Publication 311 and comply with the requirement of the AMCA Certified Ratings Program.

UL STANDARD 705

MODEL CWD

DIRECT DRIVE CENTRIFUGAL SIDEWALL EXHAUSTER

SIZES 10 & 11

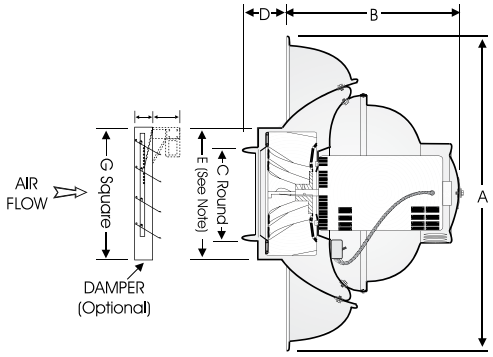

Size	A	B	C	D	E	G	Avg. Ship Wt. (lbs.)
10	26	13-1/2	11-15/16	3	15	14	37
11	30	15-1/2	13-15/16	3	17-1/2	14	50

	CFM / BHP @ Static Pressure / Sones									Catalog Number	HP	RPM	Tip Speed
	0	1/8	1/4	3/8	1/2	5/8	3/4	7/8	1				
CWD 10	629 .04/3.0	326 .03/2.6	-	-	-	-	-	-	-	101A S	1/4	685	2093
CWD 10	734 .05/4.2	474 .04/3.7	224 .04/3.6	-	-	-	-	-	-	101A S	1/4	800	2444
CWD 10	826 .07/5.3	618 .07/4.9	369 .05/4.7	142 .05/4.6	-	-	-	-	-	101A S	1/4	900	2750
CWD 10	936 .10/6.7	773 .10/6.3	527 .08/6.1	335 .07/6.0	128 .06/6.0	-	-	-	-	101A S	1/4	1020	3116
CWD 10	1046 .14/8.1	903 .13/7.7	682 .11/7.5	503 .10/7.4	329 .09/7.4	143 .08/7.3	-	-	-	101A *	1/4	1140	3483
CWD 10	950 .10/7.5	794 .09/7.2	540 .08/6.5	357 .07/5.7	173 .06/5.4	-	-	-	-	100A S	1/3	1030	3147
CWD 10	1107 .15/9.7	976 .15/9.3	777 .12/9.0	581 .11/8.2	427 .10/7.5	274 .09/6.8	-	-	-	100A S	1/3	1200	3666
CWD 10	1268 .23/12.2	1155 .22/12.0	1028 .20/11.8	813 .18/11.3	657 .16/10.5	523 .15/9.7	391 .14/9.1	250 .13/9.0	-	100A S	1/3	1375	4201
CWD 10	1453 .33/15.6	1355 .33/15.4	1252 .32/15.3	1118 .30/15.2	921 .26/14.7	785 .24/13.8	663 .23/13.0	548 .21/12.3	433 .20/11.6	100A *	1/3	1575	4812
CWD 10	1591 .45/18.1	1502 .44/18.0	1409 .43/17.9	1308 .42/17.8	1144 .38/17.7	981 .34/17.0	859 .32/16.2	748 .31/15.6	642 .29/14.9	100A50*	1/2	1725	5269
CWD 11	810 .06/3.9	525 .05/3.3	240 .04/3.1	-	-	-	-	-	-	111A S	1/4	705	2291
CWD 11	919 .08/5.3	684 .07/4.6	410 .06/4.5	164 .06/4.3	-	-	-	-	-	111A S	1/4	800	2600
CWD 11	1034 .11/6.5	837 .11/6.0	579 .09/5.7	362 .08/5.6	134 .08/5.4	-	-	-	-	111A S	1/4	900	2925
CWD 11	1171 .16/8.1	1019 .15/7.5	783 .14/7.2	571 .13/7.1	382 .11/7.0	183 .11/6.9	-	-	-	111A S	1/4	1020	3315
CWD 11	1309 .24/9.7	1182 .23/9.2	981 .21/8.7	772 .19/8.6	595 .17/8.6	427 .16/8.5	251 .15/8.4	-	-	111A *	1/4	1140	3705
CWD 11	1162 .14/9.1	1010 .13/8.6	813 .12/7.8	620 .11/6.9	439 .08/6.6	-	-	-	-	110A S	1/2	1030	3348
CWD 11	1354 .22/11.6	1243 .21/11.1	1069 .19/10.6	900 .18/9.6	733 .17/8.7	577 .15/8.6	-	-	-	110A S	1/2	1200	3900
CWD 11	1495 .29/13.5	1405 .28/13.1	1245 .26/12.6	1095 .25/11.8	941 .23/11.0	792 .22/10.9	651 .20/10.8	-	-	110A S	1/2	1325	4306
CWD 11	1636 .38/15.6	1560 .37/15.2	1419 .35/14.8	1281 .33/14.4	1140 .32/13.5	1001 .30/12.6	865 .29/11.8	736 .28/11.6	-	110A S	1/2	1450	4713
CWD 11	1805 .50/18.4	1741 .49/18.0	1624 .48/17.7	1493 .45/17.3	1370 .44/16.8	1242 .42/15.9	1116 .39/15.0	991 .38/14.4	873 .36/13.6	110A *	1/2	1600	5200

Performance certified is for installation type A - free inlet, free outlet.
Performance ratings include the effects of birdscreen in the airstream.
The sound ratings shown are loudness values in fan sones @ 5' (1.5m) in a hemispherical free field calculated per AMCA Standard 301. Values shown are for: Installation Type A: free inlet hemispherical sone levels.
* Base Unit- AMCA Seal for Sound Rating does not apply to units with speed control.
S RPM range capable with solid state speed control.
Speed (RPM) shown is nominal. Performance is based on actual speed of test.
Note: For round duct connection directly to unit without damper, cut a circular hole equal to dimension E above.

S&P USA Ventilation Systems, LLC., Div. of Soler & Palau Ventilation Group, certifies that the Models CWD shown herein are licensed to bear the AMCA Seal. The ratings shown are based on test and procedures performed in accordance with AMCA Publication 211 and AMCA Publication 311 and comply with the requirement of the AMCA Certified Ratings Program.

UL STANDARD 705

SIZES 12, 14 & 16

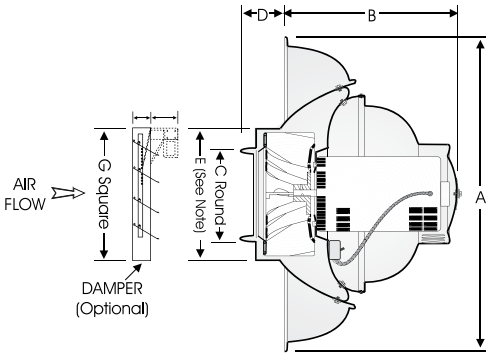

Size	A	B	C	D	E	G	Avg. Ship Wt. (lbs.)
12	30	15-1/2	13-15/16	3	17-1/2	14	50
14	36	16-1/2	17-15/16	4	22	18	84
16	36	16-1/2	17-15/16	4	22	18	84

	CFM / BHP @ Static Pressure / Sones									Catalog Number	HP	RPM	Tip Speed
	0	1/8	1/4	3/8	1/2	5/8	3/4	7/8	1				
CWD 12	986 .07/5.4	670 .06/3.6	365 .05/3.1	-	-	-	-	-	-	121A S	1/4	685	2471
	1152 .12/6.9	885 .10/5.4	621 .09/4.1	348 .08/4.5	-	-	-	-	-	121A S	1/4	800	2886
	1296 .15/8.5	1058 .13/7.0	816 .12/5.8	589 .11/5.3	340 .10/5.8	-	-	-	-	121A S	1/4	900	3247
	1439 .21/10.2	1227 .20/8.7	1007 .17/7.4	801 .15/6.5	591 .13/6.5	363 .13/7.0	-	-	-	121A S	1/4	1000	3608
	1583 .26/12.0	1393 .25/10.6	1195 .24/9.2	995 .22/8.3	813 .20/7.4	618 .18/7.8	410 .18/8.3	193 .17/8.8	-	121A *	1/4	1100	3968
CWD 14	1640 .14/7.0	1382 .12/6.7	913 .10/6.2	498 .09/5.5	-	-	-	-	-	141A S	1/2	685	2939
	1915 .21/9.2	1714 .20/8.8	1366 .18/8.4	971 .15/7.6	614 .14/6.8	-	-	-	-	141A S	1/2	800	3432
	2154 .30/11.4	1987 .29/11.0	1730 .27/10.7	1346 .25/10.1	1028 .22/9.5	711 .21/8.8	390 .20/8.7	-	-	141A S	1/2	900	3861
	2394 .41/13.7	2249 .40/13.4	2049 .38/13.1	1749 .35/12.8	1407 .32/12.3	1124 .28/11.7	839 .27/11.2	551 .26/10.7	-	141A S	1/2	1000	4290
	2585 .50/15.9	2454 .49/15.7	2281 .47/15.3	2040 .44/15.0	1722 .41/14.7	1433 .38/14.2	1170 .36/13.8	906 .34/13.3	670 .33/12.9	141A *	1/2	1080	4633
CWD 16	3360 .75/19.2	3158 .73/18.3	2937 .72/17.4	2669 .68/16.5	2349 .63/15.7	2005 .58/14.6	1692 .54/13.5	1364 .49/12.4	1032 .44/11.6	161A *	3/4	1140	4835

Performance certified is for installation type A - free inlet, free outlet.
Performance ratings include the effects of birdscreen in the airstream.
The sound ratings shown are loudness values in fan sones @ 5' (1.5m) in a hemispherical free field calculated per AMCA Standard 301. Values shown are for: Installation Type A: free inlet hemispherical sone levels.
* Base Unit- AMCA Seal for Sound Rating does not apply to units with speed control.
S RPM range capable with solid state speed control.
Speed (RPM) shown is nominal. Performance is based on actual speed of test.
Note: For round duct connection directly to unit without damper, cut a circular hole equal to dimension E above.

S&P USA Ventilation Systems, LLC., Div. of Soler & Palau Ventilation Group, certifies that the Models CWD shown herein are licensed to bear the AMCA Seal. The ratings shown are based on test and procedures performed in accordance with AMCA Publication 211 and AMCA Publication 311 and comply with the requirement of the AMCA Certified Ratings Program.

UL STANDARD 705

SCAN ME
FOR S&P USA

SCAN ME
FOR S&P CANADA

SCAN ME
FOR AMCA

ADVANCING
VENTILATION®

S&P USA Ventilation Systems, LLC
6393 Powers Avenue
Jacksonville, FL 32217
800.961.7370
www.SolerPalau-USA.com

S&P Canada Ventilation Products, Inc
6710 Maritz Drive Unit #7
Mississauga, ON L5W 0A1 - Canada
416.744.1217
www.SolerPalauCanada.com

Soler&Palau
Ventilation Group